DESIGN CRITERIA:

PROJECT NAME: **VANGUARD MODULAR - V2464-3**
BUILDING SQ. FOOTAGE: 1410 SQ. FT.
GA.
2008 NEC WITH 2006/2009 AMENDMENTS
2006 IBC WITH 2007/2009/2010 GA AMENDMENTS
2006 IMC WITH 2007/2008/2010 GA AMENDMENTS
2006 IPC WITH 2007/2008/2009/2010 GA AMENDMENTS
2006 IECC WITH 2008/2009 SUPPLEMENTS & AMENDMENTS
ANSI A117.1-2003
USE GROUP: B
CONSTRUCTION TYPE: IBC: V-B
OCCUPANT LOAD: 11
PERMISSIBLE GAS TYPE: ☐LP ☐NATURAL ☒N/A

20 PSF
50 PSF
100 PSF @ CORRIDOR
2000 LBS
(130 MPH 3-SEC GUST)

SEISMIC DESIGN CATEGORY B

SPECIAL CONDITIONS AND / OR LIMITATIONS:

1. HANDICAP ACCESS & SIGNAGE TO BE I
2. THE BUILDING IS TO BE LOCATED PER THE REQUIREMENTS OF TABLE 602 OF THE 2006 IBC
3. FIRE EXTINGUISHER(S) SHALL BE INSTALLED ON-SITE
4. ANY REQUIRED ALARM SYSTEM SHALL BE INSTALLED
5. ANY REQUIRED FLOOR DRAIN FOR THE RESTROOM SHALL BE INSTALLED ON-SITE BY OTHERS.
6. ANY REQUIRED 18" VERTICAL GRABBER SHALL BE & SUPPLIED INSTALLED ON-SITE BY OTHERS.
7. ANY REQUIRED EXTERIOR EMERGENCY LIGHTING SHALL BE INSTALLED ON-SITE BY OTHERS.
8. WASHING MACHINE WASTE DISCHARGE SHALL COMPLY AS AN INDIRECT DRAIN W/ A STANDPIPE AS REQUIRED PER 2006 IPC 406.3 & 802.4.

FOUNDATION NOTES:

1. FOUNDATION AND ANCHORING ARE SUBJECT TO ACCEPTANCE AND INSPECTION BY LOCAL AUTHORITY HAVING JURISDICTION.
2. TIE-DOWN ANCHORING: SEE SHEET S-2
3. CRAWL SPACE VENTILATION TO BE PROVIDED BY OTHERS ON-SITE PER 1203.3.1 OF THE 2006 IBC

SCOPE OF WORK

NOT INCLUDED IN THE SCOPE OF WORK
1. UTILITIES AND UTILITY CONNECTIONS
2. POURED CONCRETE (DRIVEWAY, SIDEWALK, SLABS, FOOTINGS, ETC).
3. SITE PREPARATION
4. TAX OF ANY KIND.
5. BUILDING PERMITS.

SITE WORK

SION FOR SITE WORK HAS BEEN INCLUDED.
IT IS PRESUMED THAT THE SITE WILL PROVIDE CLEAR ACCESS FOR TRUCKS AND MODULARS.

AND ALL CONCRETE WORK AT THE SITE, TO INCLUDE POURED PIERS, FOUNDATIONS, SLABS, SIDEWALKS, DRIVEWAYS OF WHATEVER KIND ARE THE RESPONSIBILITY OF THE OWNER.

IDENTIFICATION:

STATE DECAL: **STATE DECAL AND DATA PLATE PLACED IN PANEL BOX; OR PLACE ABOVE CEILING ON HITCH END (IF NO PANEL IS ON UNIT)**
DECAL: **VANGUARD MODULAR [GA.]**

FRAME / CHASSIS:

OUTRIGGERS: 48" O.C.
CROSSMEMBERS: 48" O.C.
BEAM: 12" JR. I-BEAM (99-1/2" CENTERS)
HITCH: DETACHABLE HITCH
AXLES: QUAD W/ NEW BRAKES ON TWO AXLES
TIRES: F (12-PLY)
FRAME: MEDIUM

FLOOR:

BOTTOM BOARD: ROLL, POLYETHYLENE FIBER MESH
INSULATION: R-19 UNFACED
JOISTS: 2x8 No. 2 SYP OR BTR. AT 16" O.C.
SIDEBAND JOISTS: DOUBLE 2x8 SYP No 2 OR EQUAL
DECKING: 3/4" T&G EDGE GOLD
FLOOR COVER: 1/8" TILE **#51858 - SANDRIFT WHITE**
26oz. CARPET **#30552 - GREYHOUND**
COVE BASE: 4" VINYL **BROWN**

EXTERIOR WALLS:

SIDEWALL HEIGHT: 9'-6" MIN.
STUDS: 2x4 No. 2 SYP OR BTR AT 16" O.C.
BOTTOM PLATE: SNGL 2x4 SYP No. 3 OR BTR
TOP PLATE: DBL 2x4 SYP No. 3 OR BTR
HEADERS: DOUBLE 2x4 WITH 1/2" PLYWOOD FILLER
FIRE BLOCKS: 2x MIN. AT CLG LINE AS REQ'D.
INSULATION: R-15 FACED
SHEATHING: WEYERHAUSER OR EQUAL HOUSE WRAP OVER 7/16" OSB
SIDING: 3/8"x12" SMART LAP **SW7063 - NEBULOUS WHITE**
EXT TRIM: SMART TRIM - TOP, BOTTOM, CORNERS, WINDOWS & DOORS **SW6108 - LATTE**
SKIRTING: [15] SHEETS OF 4'x8'x7/16" OSB

INTERIOR WALLS:

WALL HEIGHT: 8'-3"; EXCEPT AS NOTED ON SHEET A-2
STUDS: 2x4 SYP No. 2 OR BTR AT 16" O.C.
BOTTOM PLATE: SNGL 2x4 SYP No. 3 OR BTR
TOP PLATE: DBL 2x4 SYP No. 3 OR BTR
HEADERS: SINGLE 2x4 FLAT
FIRE BLOCKS: 2x MIN. AT CLG LINE AS REQ'D.
COVERING: 1/2" V.C.G. **HAMPTON GRAY**
M.R. GYP AROUND SHOWER/TUB ONLY
TRIM: STD. V.C.G.
FRP: 8' TALL - ALL WALLS IN RESTROOMS / LAUNDRY
8' TALL - AROUND SHOWER & TUB
INSULATION: R-11 UNFACED IN ALL INTERIOR WALLS

WINDOWS:

SIZE/TYPE 1: [08] 2/0 X 4/4 V.S. BRONZE/LOW E DUAL INSULATED
BRAND: H-R
MISC: [08] SETS OF 23" STEEL MINIBLINDS **ALABASTER**
SIZE/TYPE 2: [02] 2/0 X 2/6 V.S. BRONZE/LOW E DUAL INSULATED
BRAND: H-R
MISC: [02] SETS OF 23" STEEL MINIBLINDS **ALABASTER**

DOORS:

EXTERIOR: [03] 36"x80" STEELCRAFT W/10x10 SAFETY PANE
EXT. DOORS PAINTED: SW7063 - NEBULOUS WHITE
EXTERIOR HARDWARE: **GRADE 2 TELL**
[03] PASSAGE
[03] DEAD BOLT
[03] H.D. HYD. CLOSER

INTERIOR: [08] 36"x80" MOHAWK - SOLID CORE
[04] 36"x80" BI-FOLD W/ WOOD FRAME (WHITE)
INTERIOR HARDWARE **GRADE 2 TELL**
[06] PASSAGE **(LEVERS)**
[02] PRIVACY **(LEVERS)**
REDI-FRAME (BRONZE STEEL)
MISC: [08] FLOOR MTD. DOOR STOPS

ROOF:

RAFTERS: 2x8 #2 SYP. OR BTR. @ 16" O.C.
RIM MBR: SNG. 2x8 SYP #2
RIDGE BEAM: 2 LAYER - 28" HEIGHT & 60' LENGTH
CEILING: 2'x4' ACOUSTIC TILE, LAYIN @ 7'-10" A.F.F.
2'x4' VINYL COVERED TILE IN RESTROOMS ONLY
INSULATION: R-30C UNFACED
SHEATHING: (2) LAYERS OF 15# FELT OR EQUIV. OVER 7/16" OSB
ROOFING: 20YR. FIBERGLASS SHINGLES **COLOR:**
(3 IN 12 PITCH)
MANSARD: N/A

ELECTRICAL:

SERVICE: 120/240V SINGLE PHASE
LOAD CENTER: [01] 100 AMP, INT. MOUNT LOAD CTR.
MODEL: CUTLER HAMMER - BR1224B100
[01] 200 AMP, INT. MOUNT LOAD CTR.
MODEL: CUTLER HAMMER - BR2040B200
ENTRANCE: 1-1/2" @ 100A & 2" @ 200A STUB-DN
WIRING: MC CABLE W/ #12 WIRE
LIGHTS: [14] 48" T-8 4 TUBE FLOURESCENT TROFFERS W/ DIFFUSED LENS
[03] PORCH LT. W/PHOTO-CELL FLUORESCENT
[03] EMERGENCY/EXIT LIGHT W/ BATTERY BACKUP
FANS: [01] 80CFM EXHAUST FAN
[02] 180CFM EXHAUST FAN
RECEPTS: [26] STD. 120V DUPLEX RECEPTACLES **IVORY**
[05] GFI 120V DUPLEX RECEPTACLES **IVORY**
[02] DEDICATED 120V DUPLEX RECEPTACLES
[01] DEDICATED 50A/240V RANGE RECEPTACLE
[01] DEDICATED 30A/240V DRYER RECEPTACLE
[01] GFI 120V UNDER FLOOR HEAT TAPE RECEP
[01] W.P. EXT. GFCI 120V RECEPTACLE
SWITCHES: SEE SHEET E-1
J-BOXES: [06] W/ 3/4" ENT STUBBED ABOVE CEILING
MISC: [04] SMOKE DETECTOR W/ BATTERY (D/C)

NOTE: THE GROUNDING ON-SITE IS TO BE IN ACCORDANCE WITH NEC 250-50.

PLUMBING:

WATER SUPPLY: CPVC
WASTE: PVC SCHEDULE 40 [MULTIPLE DROPS]
WATER HEATER: [01] 50 GALLON
WATER CLOSET: [02] H.CAP ELONGATED BOWL W/ TANK
LAVATORY: [02] MTD. IN COUNTERTOP AT HANDICAP HT. W/ DUAL LEVER FAUCET. INSULATE HOT SUPPLY AND DRAIN TAILPIECE.
SINKS: [01] DBL. BOWL KITCHEN MTD. IN C. TOP @ H.C. HT. W/ SINGLE LEVER FAUCET. INSULATE HOT SUPPLY AND DRAIN TAILPIECE
[01] FIBERGLASS MOP SINK W/ LEGS
SHOWER: [01] HANDICAP W/ CURTAIN
[01] HANDICAP TUB/SHOWER W/ SEAT & CURTAIN
MISC: INSTALL 2-SETS OF S.S. GRAB BARS
[02] T.P. HOLDERS, [02] FRAMED MIRRORS
[01] WASHER SUPPLY BOX
[01] DRYER VENT
[01] 3/4 HORSE POWER GARBAGE DISPOSAL
[03] FLOOR DRAIN W/ TRAP PRIMER
[01] ICE MAKER BOX
[03] 12x12 S.S. ACCESS PANELS
DRINKING FOUNTAIN SHALL BE AVAILABLE ON-SITE OR BE INSTALLED BY OTHER AS REQUIRED BY LOCAL OFFICIALS.
ALL FIXTURE MOUNTING HEIGHTS PER ANSI A-117.1

HVAC:

HVAC: [02] 3-TON WALL MTD. WITH 10 KW HEAT STRIP W/ 60A EXTERIOR DISCONNECT
BARD MODEL #: W36A10 - BEIGE
THERMOSTAT: [02] PROGRAMMABLE
DUCTS: FIBERGLASS - 1-1/2" (R-6)
[01] 6" SCOOPS & [05] 8" SCOOPS W/ COLLAR
SUPPLY: 24"x24" ADJUSTABLE DAMPERS
RETURN-AIR: ABOVE PLENUM WALL W/ DUCTED RETURN
MISC: FRESH AIR VENTILATION IS PROVIDED THRU MANUAL AIR DAMPER IN THE HVAC SYSTEM.

FURNITURE OR MISC:

COUNTER TOP: 18 L.F. POST FORMED **FROSTY WHITE**
19 L.F. FORMICA LAMINATE **WHITE**
BASE CABINET: [01] B12, [02] B24, [01] BBC39, [03] DWEP3
UPPER CABINET: [03] W2430, [01] W3015, [02] W3030
[02] W3630, [01] WBC3630D, [02] WEP30
[01] WBC3930D, [01] W1830, [01] W2730
MISC: [02] 2-DRAWER 25" METAL FILE CABINET
15 L.F. OF WIRE SHELVING

DRAWING INDEX:

COVER SHEET / SPECIFICATIONS	A-1
ENERGY DESIGN INFORMATION	A-1.1
FLOOR PLAN	A-2
CABINET ELEVATION	A-2.1
CROSS-SECTION	A-3
EXTERIOR ELEVATION	A-4
HVAC LAYOUT	M-1
ELECTRICAL	E-1
PANEL BOX & ELEC. CALCS	E-1.1
PLUMBING - DRAIN	P-1
PLUMBING - WATER	P-2
RIDGE BEAM	S-1
BLOCKING & TIEDOWN PLAN	S-2
HEAT LOSS CALCULATIONS	SEE ATTACHED

CUSTOMER APPROVAL
[ ] **APPROVED**
[ ] **APPROVED EXCEPT AS NOTED**
APPROVAL BY _____
DATE _____
THIS PRINT MUST BE SIGNED, DATED AND RETURNED TO AMTEX CORP.

LAZENBY & ASSOCIATES, INC.
2000 NORTH 7th STREET
WEST MONROE, LA 71294 #(318) 387-2710

LTR	REVISION	BY	DATE

DRAWN BY: M.L.S.	PROJECT: VANGUARD MODULAR	TITLE: COVER SHEET / SPECIFICATIONS	
DATE: 3/16/09	SCALE: N.T.S.	DWG. NO. V2464-3	SHEET A-1

AMTEX CORP.
832 EAST WALNUT
GARLAND, TX 75040
(972) 276-7626 FAX: (972) 276-5105
Email: engineering@amtexcorp.com

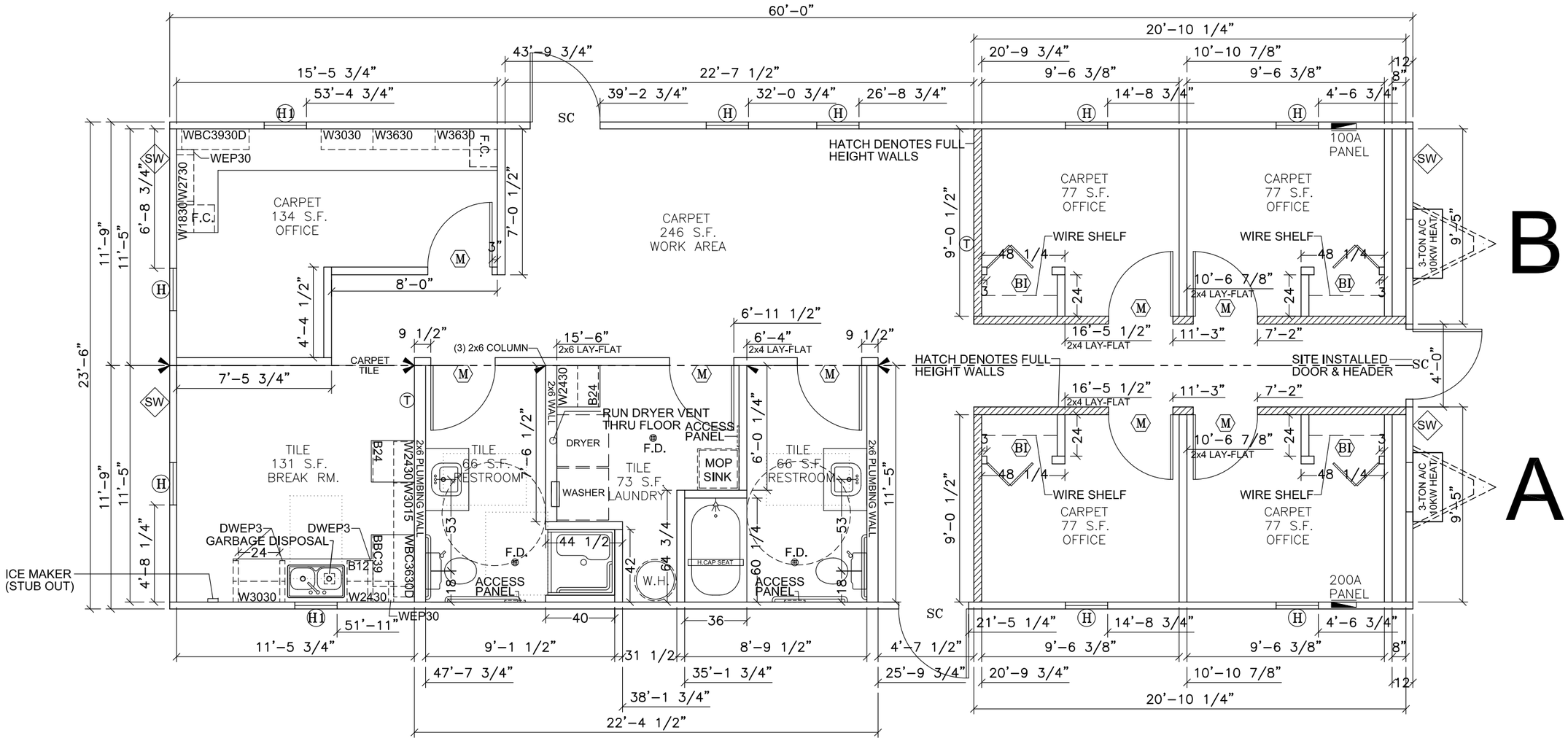

NOTE:

1. R-11 UNFACED INSULATION IN ALL INTERIOR WALLS.

SCHEDULE \ LEGEND

KEY	ITEM DESCRIPTION	SIZE	ROUGH OPENING
SC	36" X 80" STEELCRAFT W/ 10x10 PANE	36X80	40 1/2" X 82 1/2"
M	36" X 80" MOHAWK - SOLID CORE	36X80	37 1/4" X 81"
BI	36" X 80" BI-FOLD - WOOD FRAME	36X80	37 3/4" X 81"
H	2/0 X 4/4 H-R - V.S. BRONZE/LOW E DUAL INSULATED W/ MINIBLINDS	2/0X4/4	24 1/2" X 52 1/2" UP 27 1/2"
H1	2/0 X 2/6 H-R - V.S. BRONZE/LOW E DUAL INSULATED W/ MINIBLINDS	2/0X2/6	24 1/2" X 30 1/2" UP 44 1/2"

SW = SHEARWALL (REF. AMTEX DESIGN MANUAL; SECTION 07.101.001 FOR FASTENING)

► = MINIMUM 3-2x4 STUD SYP No. 2 COLUMNS WITH MIN. 2-20ga X 1-1/4" STRAPS FASTENED WITH MINIMUM 10-EACH No 10 SCREWS EACH END OF EACH STRAP.

CUSTOMER APPROVAL

[ ] APPROVED
[ ] APPROVED EXCEPT AS NOTED

APPROVAL BY _____

DATE _____

THIS PRINT MUST BE SIGNED, DATED AND RETURNED TO AMTEX CORP.

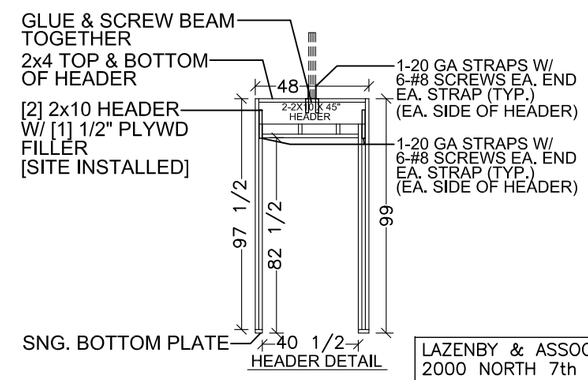

LAZENBY & ASSOCIATES, INC.
2000 NORTH 7th STREET
WEST MONROE, LA 71294 #(318) 387-2710

LTR	REVISION	BY	DATE

DRAWN BY: M.L.S.	PROJECT: VANGUARD MODULAR	TITLE: FLOOR PLAN	
DATE: 3/16/09	SCALE: 3/16"=1'-0"	DWG. NO. V2464-3	SHEET A-2

AMTEX CORP.
832 EAST WALNUT
GARLAND, TX 75040
(972) 276-7626 FAX: (972) 276-5105
Email: engineering@amtexcorp.com

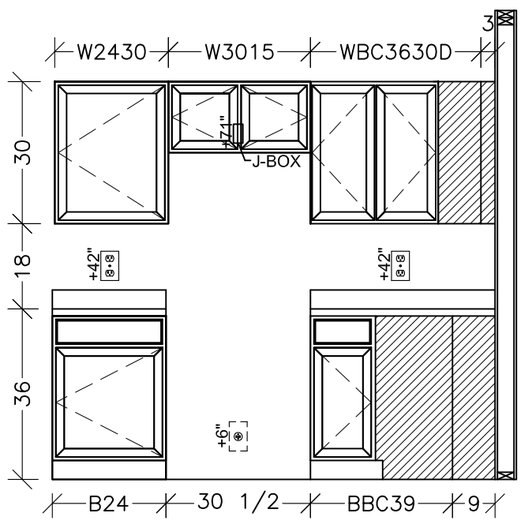

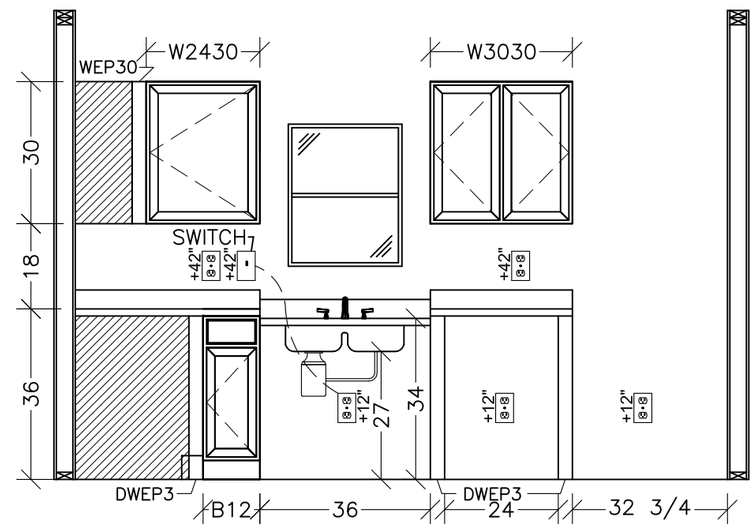

CUSTOMER APPROVAL

[ ] APPROVED
[ ] APPROVED EXCEPT AS NOTED

APPROVAL BY _____

DATE _____

THIS PRINT MUST BE SIGNED, DATED AND RETURNED TO AMTEX CORP.

LAZENBY & ASSOCIATES, INC.
2000 NORTH 7th STREET
WEST MONROE, LA 71294 #(318) 387-2710

LTR	REVISION	BY	DATE	DRAWN BY: M.L.S.	PROJECT: VANGUARD MODULAR	TITLE: CABINET ELEVATION	
				DATE: 3/16/09	SCALE: 3/8"=1'-0"	DWG. NO. V2464-3	SHEET A-2.1

AMTEX CORP.
832 EAST WALNUT
GARLAND, TX 75040
(972) 276-7626 FAX: (972) 276-5105
Email: engineering@amtexcorp.com

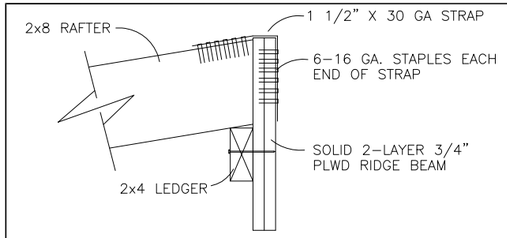

STRAP AT RAFTER TO BEAM CONN.

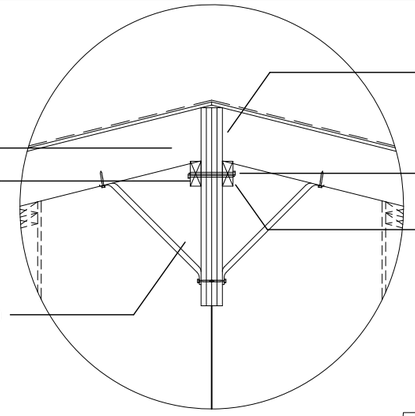

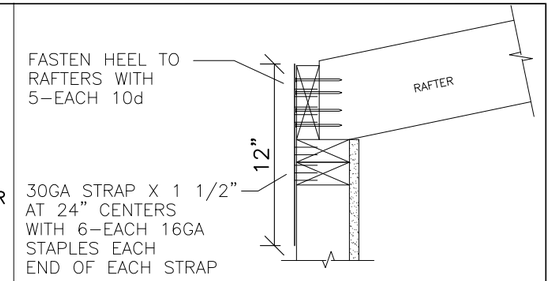

STRAP AT ROOF TO SIDEWALL

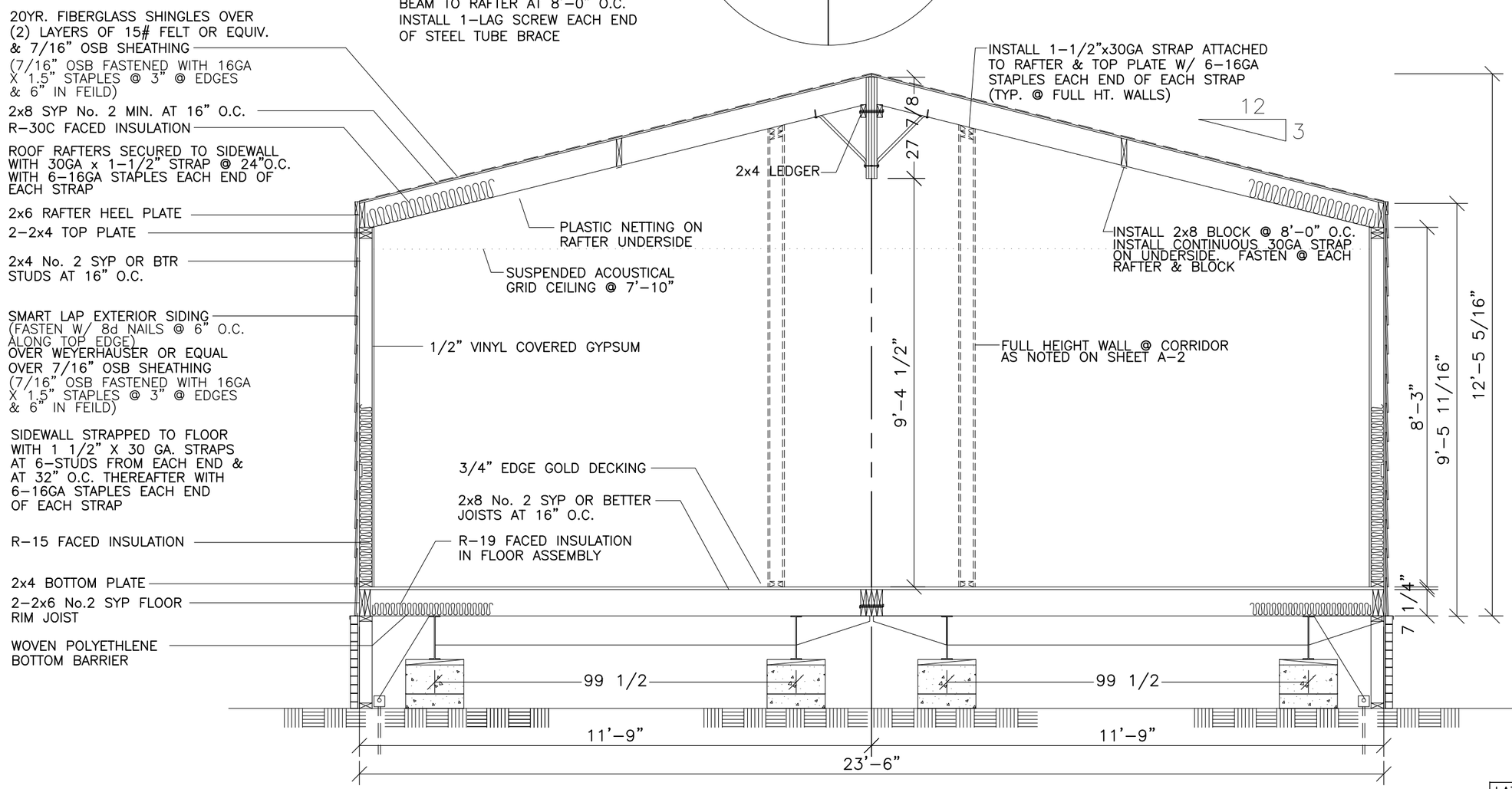

TRANSPORTATION HT.: 15'-5"

CUSTOMER APPROVAL

[ ] APPROVED
[ ] APPROVED EXCEPT AS NOTED

APPROVAL BY _____

DATE _____

THIS PRINT MUST BE SIGNED, DATED AND RETURNED TO AMTEX CORP.

LAZENBY & ASSOCIATES, INC.
2000 NORTH 7th STREET
WEST MONROE, LA 71294 #(318) 387–2710

LTR	REVISION	BY	DATE	DRAWN BY: M.L.S.	PROJECT: VANGUARD	TITLE: CROSS SECTION	
				DATE: 3/16/09	SCALE: 3/8"=1'-0"	DWG. NO. V2464-3	SHEET A-3

AMTEX CORP.
832 EAST WALNUT
GARLAND, TX 75040
(972) 276–7626 FAX: (972) 276–5105
Email: engineering@amtexcorp.com

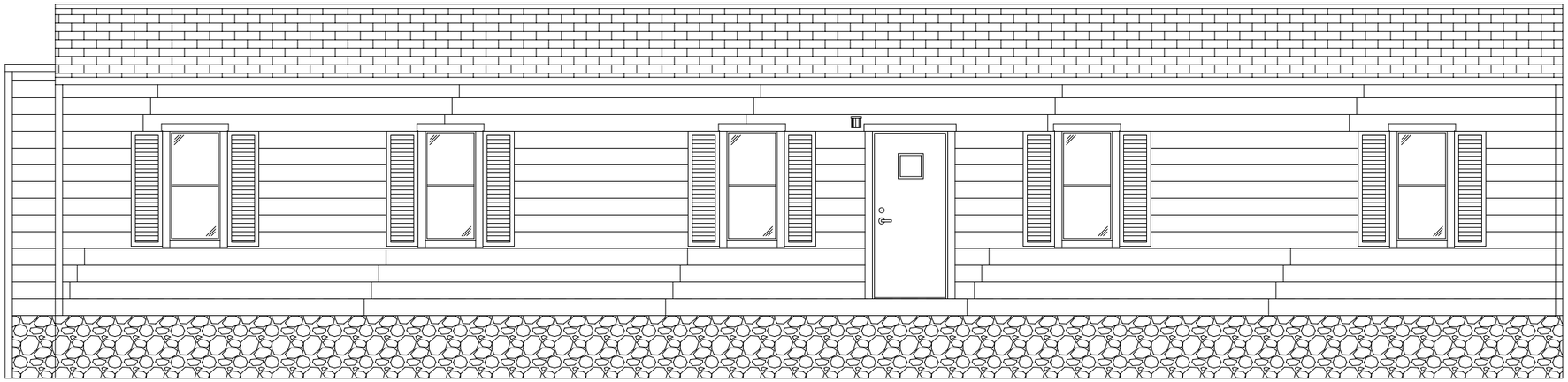

CURB SIDE

FRONT END

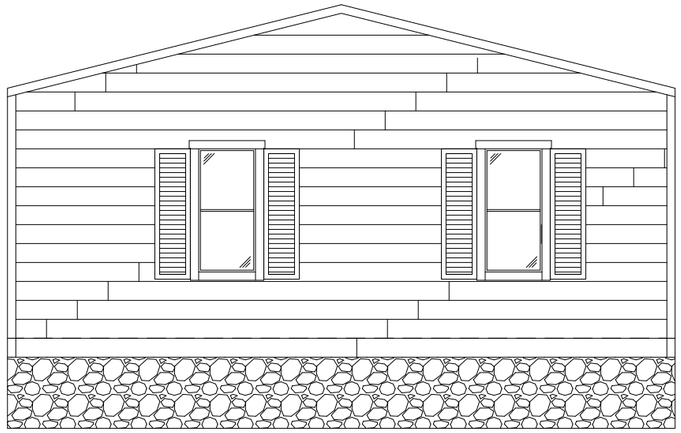

REAR END

CUSTOMER APPROVAL

[ ] APPROVED

[ ] APPROVED EXCEPT AS NOTED

APPROVAL BY _____

DATE _____

THIS PRINT MUST BE SIGNED, DATED AND RETURNED TO AMTEX CORP.

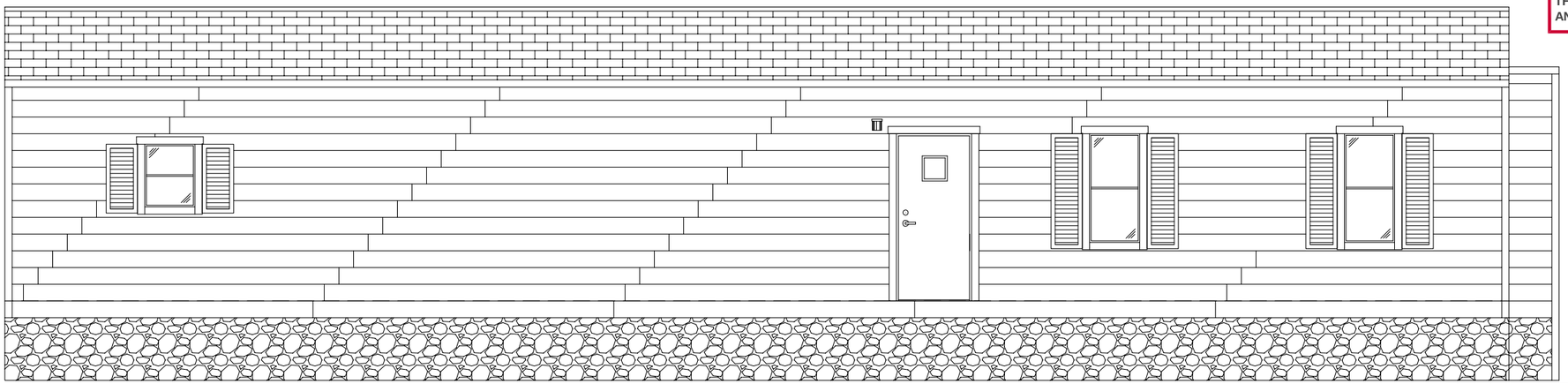

STREET SIDE

LAZENBY & ASSOCIATES, INC.
2000 NORTH 7th STREET
WEST MONROE, LA 71294 #(318) 387-2710

LTR	REVISION	BY	DATE

DRAWN BY: M.L.S.	PROJECT: VANGUARD	TITLE: EXTERIOR ELEVATION	
DATE: 3/16/09	SCALE: 3/16"=1'-0"	DWG. NO. V2464-3	SHEET A-4

AMTEX CORP.
832 EAST WALNUT
GARLAND, TX 75040
(972) 276-7626 FAX: (972) 276-5105
Email: engineering@amtexcorp.com

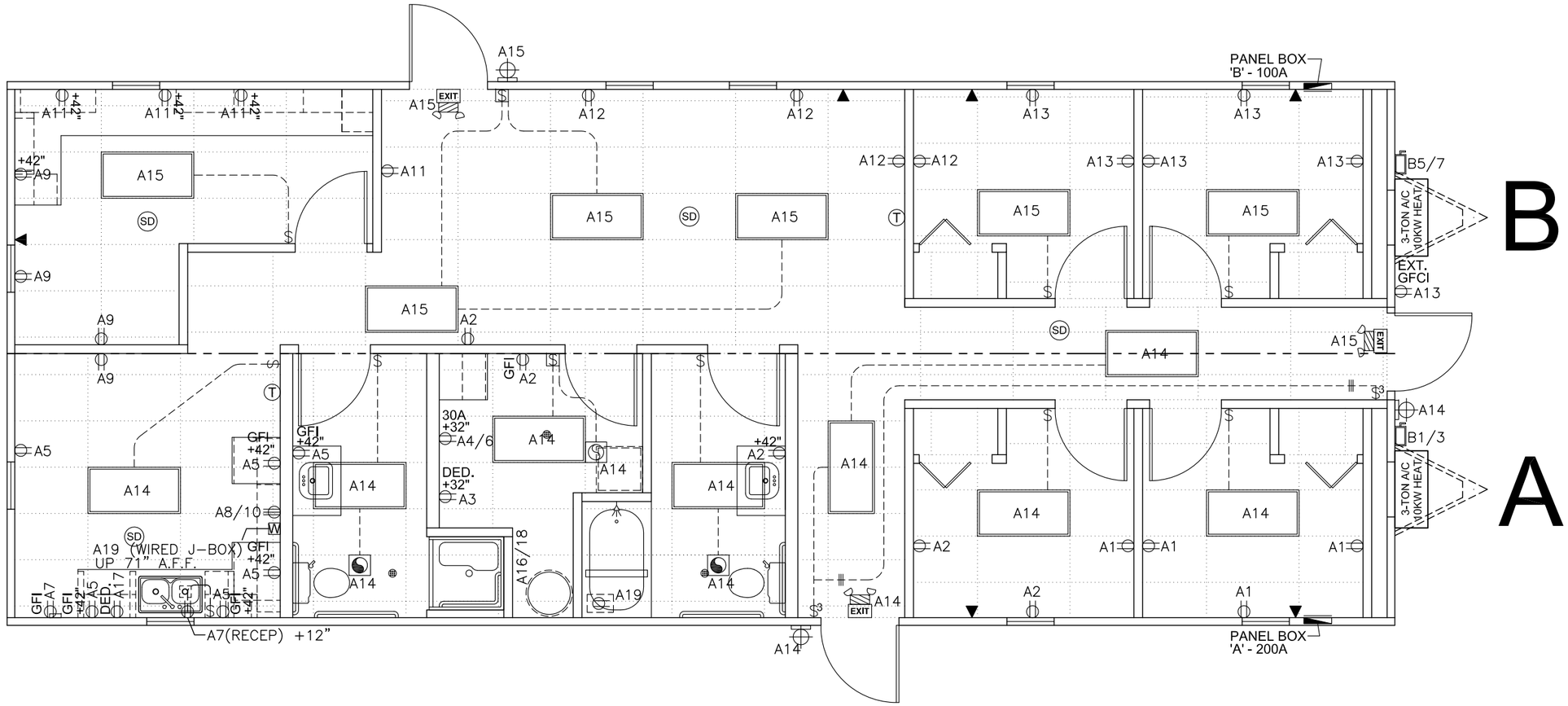

SYMBOL LEGEND

- 2'x4' T-8 4 TUBE TROFFER W/ DIFFUSED LENS
- 80CFM EXHAUST FAN ONLY
- 180CFM EXHAUST FAN ONLY
- EXT. PORCH LIGHT W/ PHOTO CELL
- PHONE / DATA JACK STUB-IN LCTN
- 120v DOUBLE TOGGLE SWITCH
- 120v SINGLE TOGGLE SWITCH
- 120V DUPLEX RECEPTACLE
- 240V RANGE RECEPTACLE
- 120V GFI RECEP MTD. UNDER FLOOR FOR ON-SITE HEAT TAPE
- 200 AMP LOAD CENTER
- EXT. DISCONNECT
- THERMOSTAT LOCATION (+48")
- SURFACE MTD. SMOKE DETECTOR (D/C)
- EMER./EXIT W/ BATT. BACKUP

CUSTOMER APPROVAL

[ ] APPROVED
[ ] APPROVED EXCEPT AS NOTED

APPROVAL BY _____

DATE _____

THIS PRINT MUST BE SIGNED, DATED AND RETURNED TO AMTEX CORP.

LAZENBY & ASSOCIATES, INC.
2000 NORTH 7th STREET
WEST MONROE, LA 71294 #(318) 387-2710

LTR	REVISION	BY	DATE

DRAWN BY: M.L.S.	PROJECT: VANGUARD MODULAR	TITLE: ELECTRICAL	
DATE: 3/16/09	SCALE: 3/16"=1'-0"	DWG. NO. V2464-3	SHEET E-1

AMTEX CORP.
832 EAST WALNUT
GARLAND, TX 75040
(972) 276-7626 FAX: (972) 276-5105
Email: engineering@amtexcorp.com

PANEL BOX 'A' LOAD CALCULATION

14 FOUR TUBE FLR. LIGHT AT 122 WATTS EACH X 125%	2135 WATTS
03 FLUORESCENT PORCH LIGHT AT 13 WATTS EACH X 125%	49 WATTS
25 120v RECEPTACLES AT 180 WATTS EACH	4500 WATTS
07 GFI 120v RECEPTACLES AT 180 WATTS EACH	1260 WATTS
01 W.P. EXT. GFCI 120v RECEP. AT 180 WATTS	180 WATTS
01 GFI120v HEAT TAPE RECEP. AT 1400 WATTS	1400 WATTS
01 STD. 120v RECEP. AT 840 WATTS (FRIDGE)	840 WATTS
01 DEDICATED 240v RECEP. AT 10600 WATTS (RANGE)	10600 WATTS
01 DEDICATED 240v RECEP. AT 5600 WATTS (DRYER)	5600 WATTS
01 DEDICATED 120v RECEP. AT 1200 WATTS (WASHER)	1200 WATTS
01 STD. 120v RECEP. AT 504 WATTS (DISPOSAL)	504 WATTS
01 DEDICATED 120v RECEP. AT 1450 WATTS (DISH WSHR)	1450 WATTS
01 WIRED J-BOX AT 850 WATTS (VENT HOOD)	850 WATTS
03 EMER/EXIT SIGN W/ BATT. BACKUP AT 18 WATTS X 125%	68 WATTS
01 80CFM EXHAUST FAN AT 156 WATTS	156 WATTS
02 180CFM EXHAUST FAN AT 204 WATTS	408 WATTS
01 50-GALLON WATER HEATER AT 4500 WATTS	4500 WATTS
	35700 WATTS

TOTAL LOADS:
35700 WATTS÷240 = 149 AMPS

PANEL BOX 'B' LOAD CALCULATION

02 3-TON AC W/10KW (HEATING CONTROLS)	21248 WATTS
	21248 WATTS

TOTAL LOADS:
21248 WATTS÷240 = 89 AMPS

CUSTOMER APPROVAL
[ ] APPROVED
[ ] APPROVED EXCEPT AS NOTED
APPROVAL BY _____
DATE _____
THIS PRINT MUST BE SIGNED, DATED AND RETURNED TO AMTEX CORP.

PANEL BOX 'A' 200 AMP MAIN BREAKER

WIRE	CIRCUIT	AMP			AMP	CIRCUIT	WIRE
#12	RECEPTACLES	20	1	2	20	RECEPTACLES	#12
#12	DEDICATED RECEP.	20	3	4	30	DRYER RECEP.	#10
#12	RECEPTACLES	20	5	6	2P		
#12	DEDICATED RECEP.	20	7	8	50	RANGE RECEP.	#8/3
#12	RECEPTACLES	20	9	10	2P		
#12	RECEPTACLES	20	11	12	20	RECEPTACLES	#12
#12	RECEPTACLES	20	13	14	20	LIGHTS	#12
#12	LIGHTS	20	15	16	30	WATER HEATER	#10
#12	DISHWASHER	20	17	18	2P		
#12	HEAT TAPE RECEP.	20	19	20	–	OPEN	–

GROUND BAR NEUTRAL

PANEL BOX 'B' 100 AMP

WIRE	CIRCUIT	AMP			AMP	CIRCUIT	WIRE
#6	HVAC UNIT	60	1	2	60	HVAC UNIT	#6
		2P	3	4	2P		
–	OPEN	–	5	6	–	OPEN	–
–	OPEN	–	7	8	–	OPEN	–
–	OPEN	–	9	10	–	OPEN	–
–	OPEN	–	11	12	–	OPEN	–

GROUND BAR NEUTRAL

LAZENBY & ASSOCIATES, INC.
2000 NORTH 7th STREET
WEST MONROE, LA 71294 #(318) 387–2710

LTR	REVISION	BY	DATE	DRAWN BY: M.L.S.	PROJECT: VANGUARD MODULAR	TITLE: PANEL BOX & ELECTRICAL CALCS.	
				DATE: 3/16/09	SCALE: N.T.S.	DWG. NO. V2464-3	SHEET E-1.1

AMTEX CORP.
832 EAST WALNUT
GARLAND, TX 75040
(972) 276–7626 FAX: (972) 276–5105
Email: engineering@amtexcorp.com

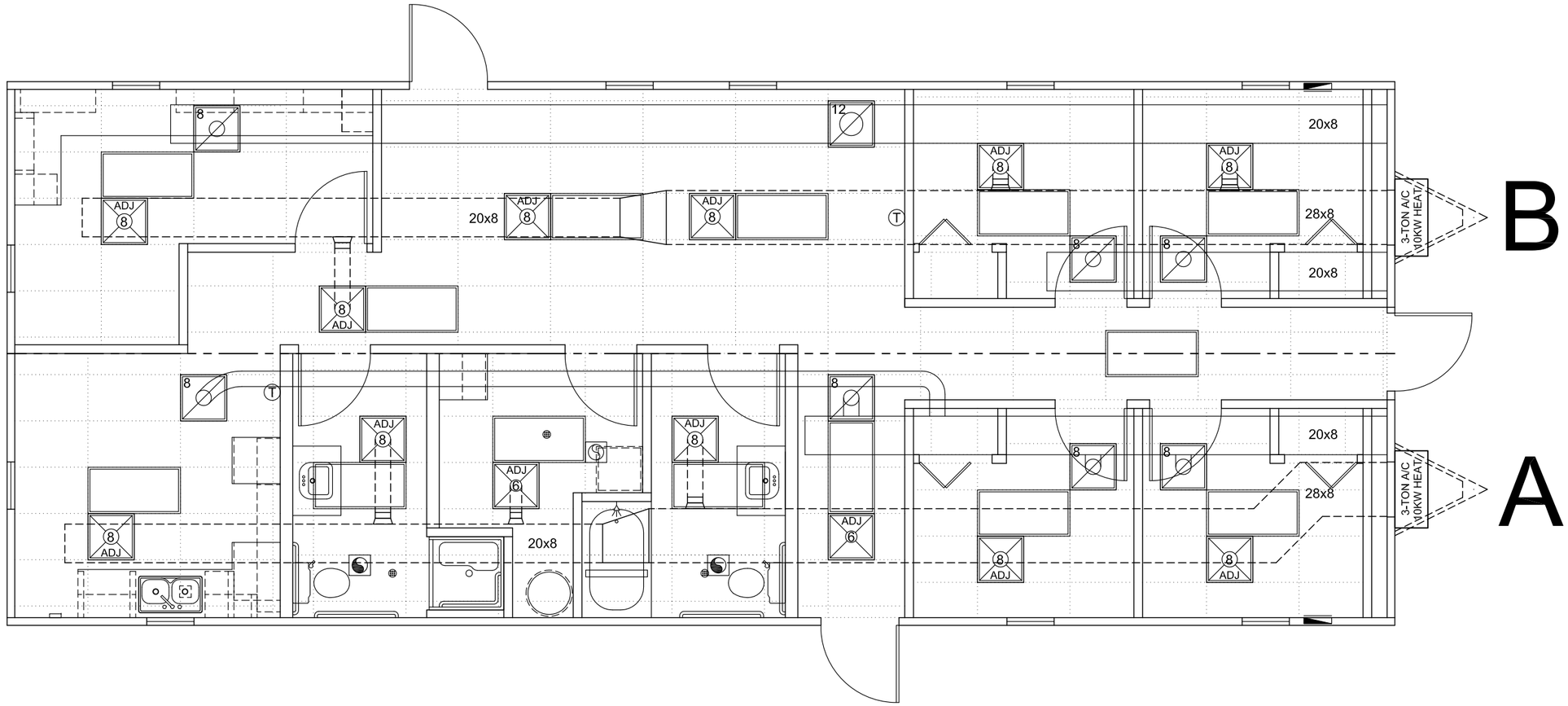

SYMBOL LEGEND

24" X 24" DIFFUSER
ADJUSTABLE

JUMP DUCT

SCOOP W/ COLLAR

CUSTOMER APPROVAL

[ ] APPROVED
[ ] APPROVED EXCEPT AS NOTED

APPROVAL BY _____

DATE _____

THIS PRINT MUST BE SIGNED, DATED AND RETURNED TO AMTEX CORP.

LAZENBY & ASSOCIATES, INC.
2000 NORTH 7th STREET
WEST MONROE, LA 71294 #(318) 387-2710

LTR	REVISION	BY	DATE

DRAWN BY: M.L.S.	PROJECT: VANGUARD MODULAR	TITLE: CEILING & HVAC LAYOUT	
DATE: 3/16/09	SCALE: 3/16"=1'-0"	DWG. NO. V2464-3	SHEET M-1

AMTEX CORP.
832 EAST WALNUT
GARLAND, TX 75040
(972) 276-7626 FAX: (972) 276-5105
Email: engineering@amtexcorp.com

DWV PIPING LEGEND

———	1 1/2" DWV LINE
═══	2" DWV LINE
≡≡≡	3" DWV LINE

NOTE: DRAIN 'TREES' ARE STUBBED THRU FLOOR ONLY AT FACTORY AND FINAL CONNECTION TO SEWER IS TO BE COMPLETED ON-SITE BY OTHERS.

PIPING 2" OR SMALLER SHALL BE SUPPORTED 4' O.C. HORIZONTALLY @ FLOOR, CEILING, & MID-STORY VERTICALLY PER TABLE 308.5 FOOT B OF THE 2006 IPC

MANIFOLD PROVIDED & INSTALLED ON-SITE BY OTHERS.

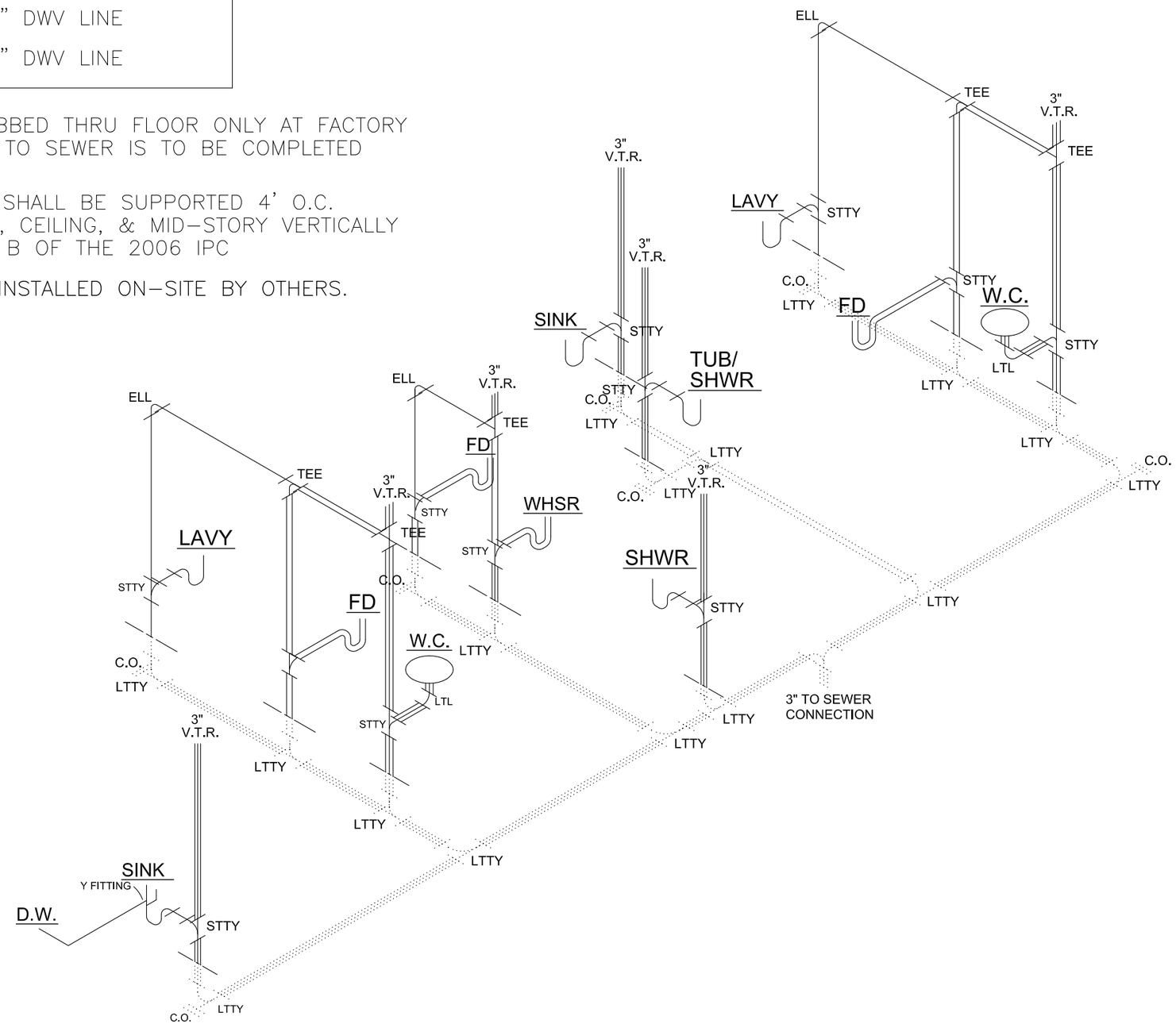

CUSTOMER APPROVAL

[ ] APPROVED
[ ] APPROVED EXCEPT AS NOTED

APPROVAL BY _____

DATE _____

THIS PRINT MUST BE SIGNED, DATED AND RETURNED TO AMTEX CORP.

LAZENBY & ASSOCIATES, INC.
2000 NORTH 7th STREET
WEST MONROE, LA 71294 #(318) 387-2710

LTR	REVISION	BY	DATE	DRAWN BY: M.L.S.	PROJECT: VANGUARD MODULAR	TITLE: PLUMBING - DRAIN		AMTEX CORP. 832 EAST WALNUT GARLAND, TX 75040
				DATE: 3/16/09	SCALE: N.T.S.	DWG. NO. V2464-3	SHEET P-1	(972) 276-7626 FAX: (972) 276-5105 Email: engineering@amtexcorp.com

WATER LINE LEGEND	
	1/2" WATER LINE
	3/4" WATER LINE
	1" WATER LINE

NOTES:

1. PER SECTION 504.5 OF THE 2006 IPC. WATER HEATERS SHALL HAVE A TEMP/PRESSURE RELIEF VALVE INSTALLED.
2. PER SECTION 504.7.1 OF THE 2006 IPC. THE DRIP PAN SHALL BE DRAINED BY AN INDIRECT WASTE PIPE HAVING A MINIMUM DIAMETER OF 3/4".
3. PER SECTION 504.7.2 OF THE 2006 IPC. THE DRIP PAN DRAIN SHALL EXTEND FULL-SIZE AND TERMINATE OVER A SUITABLY LOCATED INDIRECT WASTE RECEPTOR OR FLOOR DRAIN OR EXTEND TO THE EXTERIOR OF THE BUILDING AND TERMINATE NOT LESS THAN 6 INCHES AND NOT MORE THAN 24 INCHES ABOVE THE ADJACENT GROUND SURFACE.
4. PER SECTION 606.2 OF THE 2006 IPC. A SHUT-OFF VALVE SHALL BE INSTALLED AT EACH FIXTURE & WATER HEATER.
5. PIPING 1" OR SMALLER SHALL BE SUPPORTED 3' HORIZONTALLY @ FLOOR, CEILING, & MID-STORY VERTICALLY PER TABLE 308.5 FOOTNOTE B OF THE 2006 IPC.

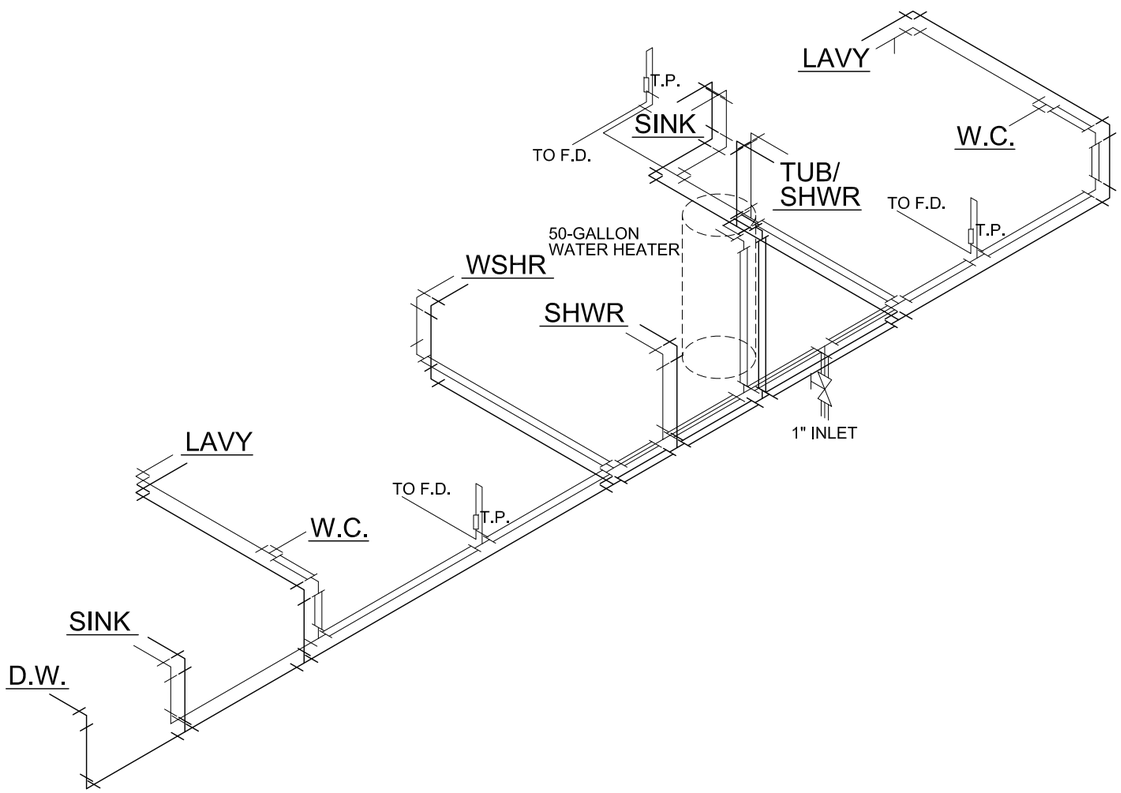

CUSTOMER APPROVAL

[ ] APPROVED
[ ] APPROVED EXCEPT AS NOTED

APPROVAL BY _____

DATE _____

THIS PRINT MUST BE SIGNED, DATED AND RETURNED TO AMTEX CORP.

LAZENBY & ASSOCIATES, INC.
2000 NORTH 7th STREET
WEST MONROE, LA 71294 #(318) 387-2710

LTR	REVISION	BY	DATE	DRAWN BY: M.L.S.	PROJECT: VANGUARD MODULAR	TITLE: PLUMBING - WATER		AMTEX CORP. 832 EAST WALNUT GARLAND, TX 75040
				DATE: 3/16/09	SCALE: N.T.S.	DWG. NO. V2464-3	SHEET P-2	(972) 276-7626 FAX: (972) 276-5105 Email: engineering@amtexcorp.com

LAYER ONE

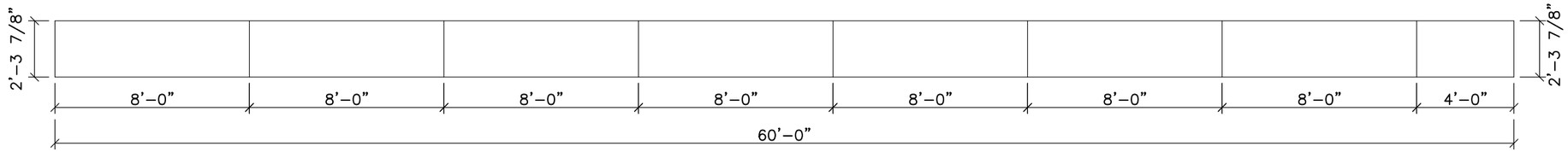

LAYER TWO

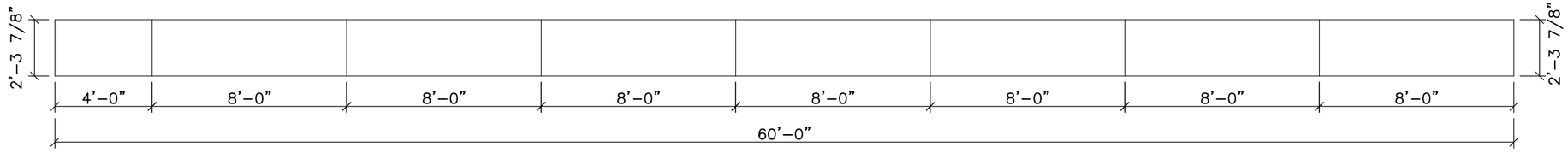

CUSTOMER APPROVAL

[ ] APPROVED
[ ] APPROVED EXCEPT AS NOTED

APPROVAL BY _____

DATE _____

THIS PRINT MUST BE SIGNED, DATED AND RETURNED TO AMTEX CORP.

RIDGE BEAM NOTES:

1. RIDGE BEAM CONSTRUCTION IS THE SAME FOR BOTH SIDES OF UNIT (MIRRORED).
2. RIDGE BEAM IS CONSTRUCTED WITH 3/4" 5-PLY, 5-LAYER GROUP 1 SPECIES PLYWOOD.
3. RIDGE BEAM CONSTRUCTION SHALL BE IN ACCORDANCE WITH APA PLYWOOD DESIGN SPECIFICATION, SUPPLEMENT 5.

LAZENBY & ASSOCIATES, INC.
2000 NORTH 7th STREET
WEST MONROE, LA 71294 #(318) 387-2710

LTR	REVISION	BY	DATE	DRAWN BY: M.L.S.	PROJECT: VANGUARD MODULAR	TITLE: RIDGE BEAM	
				DATE: 3/16/09	SCALE: 3/16"=1'-0"	DWG. NO. V2464-3	SHEET S-1

AMTEX CORP.
832 EAST WALNUT
GARLAND, TX 75040
(972) 276-7626 FAX: (972) 276-5105
Email: engineering@amtexcorp.com

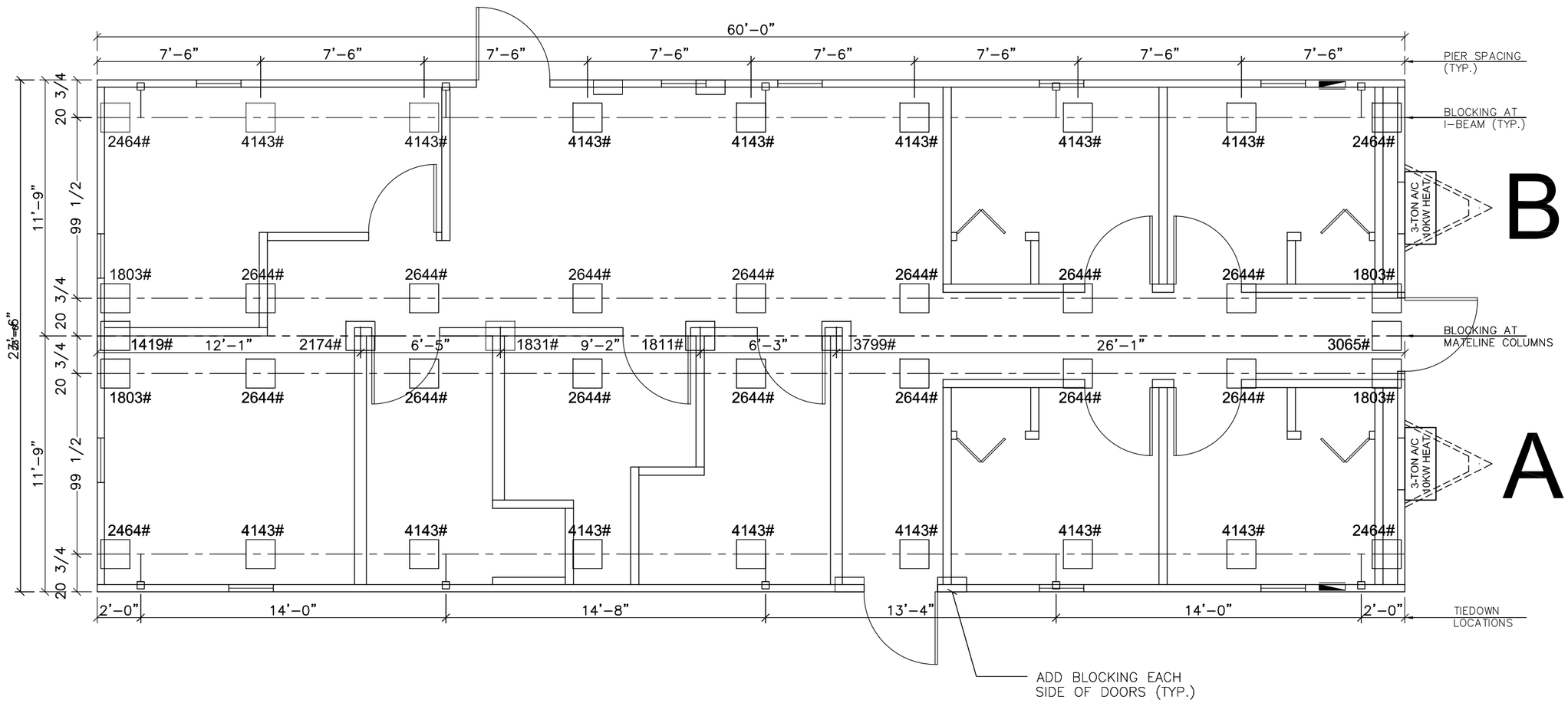

CUSTOMER APPROVAL

[ ] APPROVED
[ ] APPROVED EXCEPT AS NOTED

APPROVAL BY _____

DATE _____

THIS PRINT MUST BE SIGNED, DATED AND RETURNED TO AMTEX CORP.

NOTES:

1. SOIL CAPACITY IS ASSUMED TO BE 2500 PSF (FIELD VERIFY BY OTHERS).
2. PIER SPACING BASED ON ASSUMED PAD SIZE OF 16" X 16".
3. BLOCKS ADDED EACH SIDE OF EXT. DOORS (TYP.)

LAZENBY & ASSOCIATES, INC.
2000 NORTH 7th STREET
WEST MONROE, LA 71294 #(318) 387-2710

LTR	REVISION	BY	DATE

DRAWN BY: M.L.S.	PROJECT: VANGUARD MODULAR	TITLE: BLOCKING / TIE DOWN	
DATE: 3/16/09	SCALE: 3/16"=1'-0"	DWG. NO. V2464-3	SHEET S-2

AMTEX CORP.
832 EAST WALNUT
GARLAND, TX 75040
(972) 276-7626 FAX: (972) 276-5105
Email: engineering@amtexcorp.com