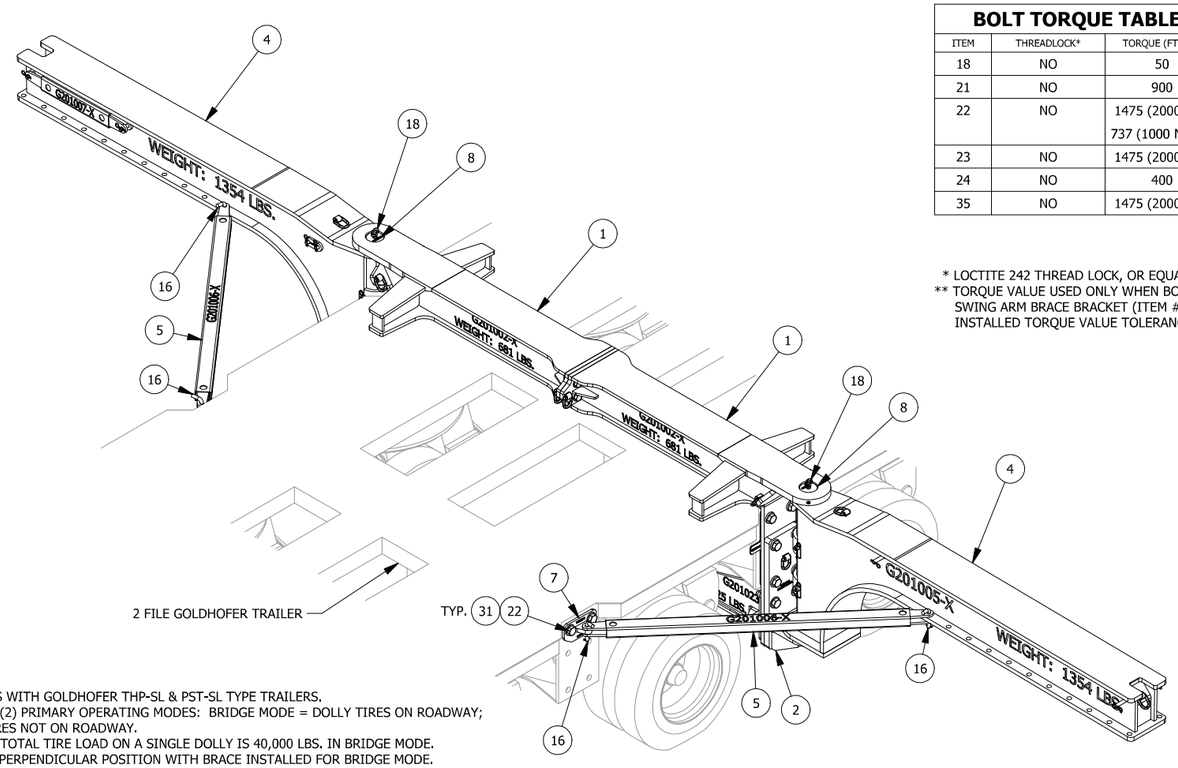

BOLT TORQUE TABLE

ITEM	THREADLOCK*	TORQUE (FT•LBS)
18	NO	50
21	NO	900
22	NO	1475 (2000 Nm) 737 (1000 Nm)**
23	NO	1475 (2000 Nm)
24	NO	400
35	NO	1475 (2000 Nm)

* LOCTITE 242 THREAD LOCK, OR EQUAL
** TORQUE VALUE USED ONLY WHEN BOLTING SWING ARM BRACE BRACKET (ITEM #7) INSTALLED TORQUE VALUE TOLERANCE ±3%

PARTS LIST

	ITEM	QTY	PART No.	DESCRIPTION	WEIGHT EA (LBS)
	1	2	G201002	COMPRESSION CHORD	680.57
	2	2	G201003	BOTTOM HINGE	165.64
	3	1	G201023	2 FILE TENSION CHORD	224.55
	4	2	G201005	SWING ARM	1353.56
	5	2	G201006	SWING ARM BRACE - TYPE 1	46.35
	6	2	G201007	SWING ARM BRACE - TYPE 2	20.99
	7	2	G201008	SWING ARM BRACE BRACKET	7.85
	8	2	G201009	SWING ARM TOP PIVOT PIN	35.50
	9	2	G201010	SWING ARM BOTTOM PIVOT PIN	37.77
	10	6	G201012	SHIM PLATE, 1/16"	3.33
	11	2	G201013	PIN - TYPE 1	1.96
	12	2	G201014	PIN - TYPE 2	3.61
	14	2	G201017	LINK PLATE	1.09
	15	8	509	WESTERN WIRE SAFETY PIN - 7/8" x 2 3/4" INSIDE CLEAR., OR EQUAL	.04
	16	4	90146A214	MCMASTER-CARR BENT HITCH PIN, Ø3/4" x 3 1/2" USEABLE LENGTH, ZINC PLATED OR EQUAL	.85
	17	12	98335A084	MCMASTER-CARR HAIRPIN COTTER - 5/8" TO 3/4", 9/64" WIRE, OR EQUAL	.03
	18	2	9900217	CROSBY EYE BOLT STOCK #S-279 (2,600 WLL), OR EQUAL	.30
	21	4		HEX HEAD CAP SCREW, 1"-8 UNC x 3.5", SAE J429 GRADE 8, ZINC COATED	1.11
	22	8		HEX HEAD CAP SCREW, M30-3.5 x 90, DIN 933, (CLASS 10.9), ZINC COATED	1.68
***	23	4		HEX HEAD CAP SCREW, M30-3.5 x 130, DIN 931, (CLASS 10.9), ZINC COATED	2.17
	24	2		SOCKET HEAD CAP SCREW, 2"-4.5 UNC x 10", ASTM A574, ZINC COATED	12.23
	26	4		HEX NUT, 1"-8 UNC, SAE J995 GRADE 8, ZINC COATED	.33
***	27	12		HEX NUT, M30-3.5, DIN 267 CLASS 10, ZINC COATED	.57
	28	2		HEAVY HEX NUT, 2"-4.5 UNC, ASTM A194 - GRADE 2H, ZINC COATED (NO OVERTAP)	3.34
	30	8		WASHER, 1", SAE THRU HARDENED, ZINC COATED	.09
	31	11		WASHER, 1 1/4", SAE THRU HARDENED, ZINC COATED	.16
	32	2		WASHER, 2", SAE THRU HARDENED, ZINC COATED	.38
	28	1	GPOR2CR-EA	AMSOIL SYNTHETIC POLYMERIC OFF-ROAD GREASE NLGI#2, 15 oz CARTRIDGE, OR EQUAL	
	34	20		FLAT WASHER, 1 1/4", ASTM F436, STRUCTURAL, THRU HARDENED, EXTRA THICK, ZINC COATED	.35
***	35	8		HEX HEAD CAP SCREW, M30-3.5 x 140, DIN 931, (CLASS 10.9), ZINC COATED	2.29

***HEX HEAD CAP SCREW, 1 1/4"-7 UNC x 5.5", SAE J429 GRADE 8, ZINC COATED AND HEX NUT, 1 1/4-7 UNC, SAE J995 GRADE 8, ZINC COATED MAY BE USED AS AN ALTERNATE FOR ITEMS 20, 23, AND 30.

1

NOTES:

1. OUTRIGGER ASSEMBLY WORKS WITH GOLDHOFER THP-SL & PST-SL TYPE TRAILERS.
2. THE OUTRIGGER SYSTEM HAS (2) PRIMARY OPERATING MODES: BRIDGE MODE = DOLLY TIRES ON ROADWAY; PAVEMENT MODE = DOLLY TIRES NOT ON ROADWAY.
3. MAXIMUM ALLOWABLE GROSS TOTAL TIRE LOAD ON A SINGLE DOLLY IS 40,000 LBS. IN BRIDGE MODE.
4. SWING ARMS MUST BE IN 90° PERPENDICULAR POSITION WITH BRACE INSTALLED FOR BRIDGE MODE.
5. SWING ARM CAN CARRY DOLLY WITH ARM AT EITHER 90° OR 24° FROM TRAILER.
6. NO DOLLY BRAKES SHALL BE USED.
7. CARGO MAY BEAR DIRECTLY ON COMPRESSION CHORDS AND COMPRESSION CHORD SPACER PROVIDED THESE COMPONENTS BEAR ON TRAILER DECK. IF GAPS EXIST DUE TO LOCAL DECK FLATNESS VARIATION, GAPS SHALL BE FILLED WITH SHIM MATERIAL. CHORD BOLTED SPLICE LACKS SUFFICIENT MOMENT STRENGTH FOR TRANSVERSE LOAD DISTRIBUTION ACROSS TRAILER DECK. IF TRANSVERSE LOAD DISTRIBUTION IS REQUIRED DUE TO CARGO GEOMETRY, VERSUS GOLDHOFER DECK LOAD BEARING SURFACE LIMITS, W-BEAMS (OR EQUAL) SHALL BE USED BETWEEN CARGO AND TRAILER DECK.
8. OUTRIGGER ASSEMBLY CANNOT BE ATTACHED AT TRAILER TRANSVERSE JOINT LOCATIONS.
9. DOLLIES WITH NON-DOUBLE ACTING LIFTING CYLINDER REQUIRE CABLE OR CHAIN SECUREMENT WHEN DOLLIES ARE CARRIED. DOLLY LIFT CYLINDER RAM/ROD SHALL BE FULLY RETRACTED WHEN CARRIED.
10. SWING ARM HINGE PINS SHALL BE GREASED THROUGH ZERKS AFTER OUTRIGGER ASSEMBLY TO TRAILER IS COMPLETE.
11. PREFERRED DOLLY TIRE SIZE IS 235/75R17.5 FOR IMPROVED TIRE TO ROAD CLEARANCE WHEN CARRYING DOLLIES. ALTERNATELY, DOLLY TIRES CAN BE 275/70R22.5.
12. SEE SHEET 9 OF 12 FOR SHIM INSTALLATION CRITERIA.
13. THE GUIDELINES ESTABLISHED IN NOTES 14 & 15 BELOW ASSUME A SIMPLIFIED INDEPENDENT HYDRAULIC SUSPENSION CIRCUIT FOR THE DOLLIES. IN OTHERWORDS, THE DOLLY SUSPENSION OIL AND PUMP SYSTEM ARE NOT PART OF THE MODULAR TRAILER HYDRAULIC SUSPENSION CIRCUIT WHICH WOULD REQUIRE AN INTEGRATED PRESSURE COMPENSATION SYSTEM.
14. IN BRIDGE MODE, THE TRAILER SYSTEM STABILITY SHALL BE PROVIDED BY THE MODULAR TRAILER (3) EACH HYDRAULIC SUSPENSION ZONES. ALL DOLLY SUSPENSION CYLINDERS SHALL BE ON A SINGLE HYDRAULIC ZONE WITH EQUALIZATION BETWEEN ALL CYLINDERS. THE DOLLY SUSPENSION ZONE PROVIDES NO TIPPING STABILITY TO TRAILER ASSEMBLY. THE GOLDHOFER STABILITY TRIANGLE CENTER OF PRESSURE SHALL BE COINCIDENT WITH THE DOLLY SUSPENSION ZONE CENTER OF PRESSURE.
15. MODULAR TRAILER RIDE HEIGHT SHALL BE SET PRIOR TO LOADING DOLLIES. ONCE DOLLY HYDRAULIC SUSPENSION ZONE IS PRESSURIZED, MAIN TRAILER SUSPENSION RIDE HEIGHT SHALL NOT BE CHANGED NOR SHALL DECK LEVEL ADJUSTMENTS BE MADE BY OPERATOR. OPTIMUM RIDE HEIGHT POSITIONS DOLLY SUSPENSION CYLINDER AT MID STROKE WITH LEVEL TRAILER DECK CONDITION.
16. SELECTED DOLLY ADAPTER POSITION ON SWING ARM SHALL BE COMMON FOR ALL SWING ARMS.
17. OUTRIGGER ASSEMBLY TO TRAILER BOLTED CONNECTION RELIES ON FRICTION ONLY. HARDWARE SHALL BE TORQUED AS SPECIFIED.
18. CONNECTION HARDWARE (ITEMS 20 & 21) FOR ITEM 3 SHALL BE INSTALLED PRIOR TO PRE-TENSIONING CONNECTION HARDWARE (ITEMS 19 & 30) TO TRAILER FRAME.
19. TIRE TO TENSION CHORD (ITEM 3) CLEARANCE AT EXTREME TURNING ANGLE (MIN. TRAILER TURN RADIUS) IS MARGINAL AT TRAILER ENDS. TIRE TREAD CORNER MAY ACTUALLY RUB DEPENDING ON SUSPENSION RIDE HEIGHT. THIS CONSTRAINT SHOULD BE CHECKED PRIOR TO SERVICE TO ESTABLISH CONFIGURATION SPECIFIC TURN LIMITS IF NECESSARY.
20. FOR PAVEMENT MODE WITH SWING ARMS ROTATED INWARD AND DOLLIES BEING CARRIED, THE MAXIMUM DOLLY SELF WEIGHT SHALL NOT EXCEED 4,000 LBS. PER DOLLY.
21. SWING ARM BRACE (ITEM 5 & 6) AND LINK PLATE (ITEM #13) MAY BE MOUNTED ON EITHER SIDE OF SWING ARM (ITEM 4).

BRIDGE MODE
TOP SIDE ISOMETRIC VIEW

SWING ARMS (ITEM 4) SHOWN IN THE 90° PERPENDICULAR POSITION

THIS DOCUMENT IS PROVIDED "AS IS, WHERE IS" AND NO REPRESENTATIONS OR WARRANTIES ARE MADE, EXPRESSED OR IMPLIED. RELIANCE ON THE DOCUMENT IS AT THE SOLE RISK OF THE USER. TO THE EXTENT NOT PROHIBITED BY LAW, UNDER NO CIRCUMSTANCES SHALL BIGGE BE LIABLE WITH RESPECT TO THIS DOCUMENT FOR SPECIAL, INDIRECT, INCIDENTAL, OR CONSEQUENTIAL DAMAGES, INCLUDING WITHOUT LIMITATION, DAMAGES RESULTING FROM ANY INACCURACIES OR FROM LOSS OF PROFITS, BUSINESS OR GOODWILL, ON ANY THEORY OF LIABILITY, WHETHER ARISING UNDER TORT (INCLUDING NEGLIGENCE), CONTRACT OR OTHERWISE, WHETHER OR NOT BIGGE HAS BEEN ADVISED OR IS AWARE OF THE POSSIBILITY OF SUCH DAMAGES. IF, NOTWITHSTANDING ANY OTHER PROVISIONS OF THIS AGREEMENT, BIGGE IS FOUND TO BE LIABLE TO USER FOR ANY DAMAGE OR LOSS THAT ARISES OUT OF OR IS IN ANY WAY CONNECTED TO THIS DOCUMENT, BIGGE'S ENTIRE LIABILITY FOR DIRECT DAMAGES UNDER THIS AGREEMENT SHALL BE LIMITED TO FIFTY DOLLARS ($50.00).

NO.	REVISIONS	DATE	BY	DATE	BY	DATE	BY
		DRAWN		CHECKED		APPROVED	
1	REVISD NOTES	1/20/2017	MWJ	1/20/2017	VLH	1/20/2017	VLH
0	ISSUED FOR CONSTRUCTION	3/15/2016	MWJ	11/8/2016	VLH	11/8/2016	VLH

This drawing contains information proprietary to Bigge Crane and Rigging Co. It is submitted in confidence and is to be used solely for the purpose for which it is furnished and returned upon request. This drawing and such information is not to be reproduced, transmitted, disclosed or used in whole or in part without the written authorization of Bigge Crane and Rigging Co.

BIGGE CRANE and RIGGING CO.
Established 1916
10700 Bigge Ave., San Leandro, CA 94577
www.BIGGE.com

BIGGE EQUIPMENT ASSEMBLY
ISOMETRIC VIEW
G201022 - SWING TYPE OUTRIGGER ASSEMBLY
2 FILE TRAILER CONFIGURATION

SCALE: (U.N.O)	SIZE	PROJECT No.	DWG. No.	SHEET	REV.
NTS	B		G201022	1 of 12	1

G201022 - SWING TYPE OUTRIGGER ASSEMBLY - 2 FILE TRAILER CONFIGURATION

APPROX. WEIGHT: 5053 LBS.±

THIS DOCUMENT IS PROVIDED "AS IS, WHERE IS" AND NO REPRESENTATIONS OR WARRANTIES ARE MADE, EXPRESSED OR IMPLIED. RELIANCE ON THE DOCUMENT IS AT THE SOLE RISK OF THE USER. TO THE EXTENT NOT PROHIBITED BY LAW, UNDER NO CIRCUMSTANCES SHALL BIGGE BE LIABLE WITH RESPECT TO THIS DOCUMENT FOR SPECIAL, INDIRECT, INCIDENTAL, OR CONSEQUENTIAL DAMAGES, INCLUDING WITHOUT LIMITATION, DAMAGES RESULTING FROM ANY INACCURACIES OR FROM LOSS OF PROFITS, BUSINESS OR GOODWILL, ON ANY THEORY OF LIABILITY, WHETHER ARISING UNDER TORT (INCLUDING NEGLIGENCE), CONTRACT OR OTHERWISE, WHETHER OR NOT BIGGE HAS BEEN ADVISED OR IS AWARE OF THE POSSIBILITY OF SUCH DAMAGES. IF, NOTWITHSTANDING ANY OTHER PROVISIONS OF THIS AGREEMENT, BIGGE IS FOUND TO BE LIABLE TO USER FOR ANY DAMAGE OR LOSS THAT ARISES OUT OF OR IS IN ANY WAY CONNECTED TO THIS DOCUMENT, BIGGE'S ENTIRE LIABILITY FOR DIRECT DAMAGES UNDER THIS AGREEMENT SHALL BE LIMITED TO FIFTY DOLLARS ($50.00).

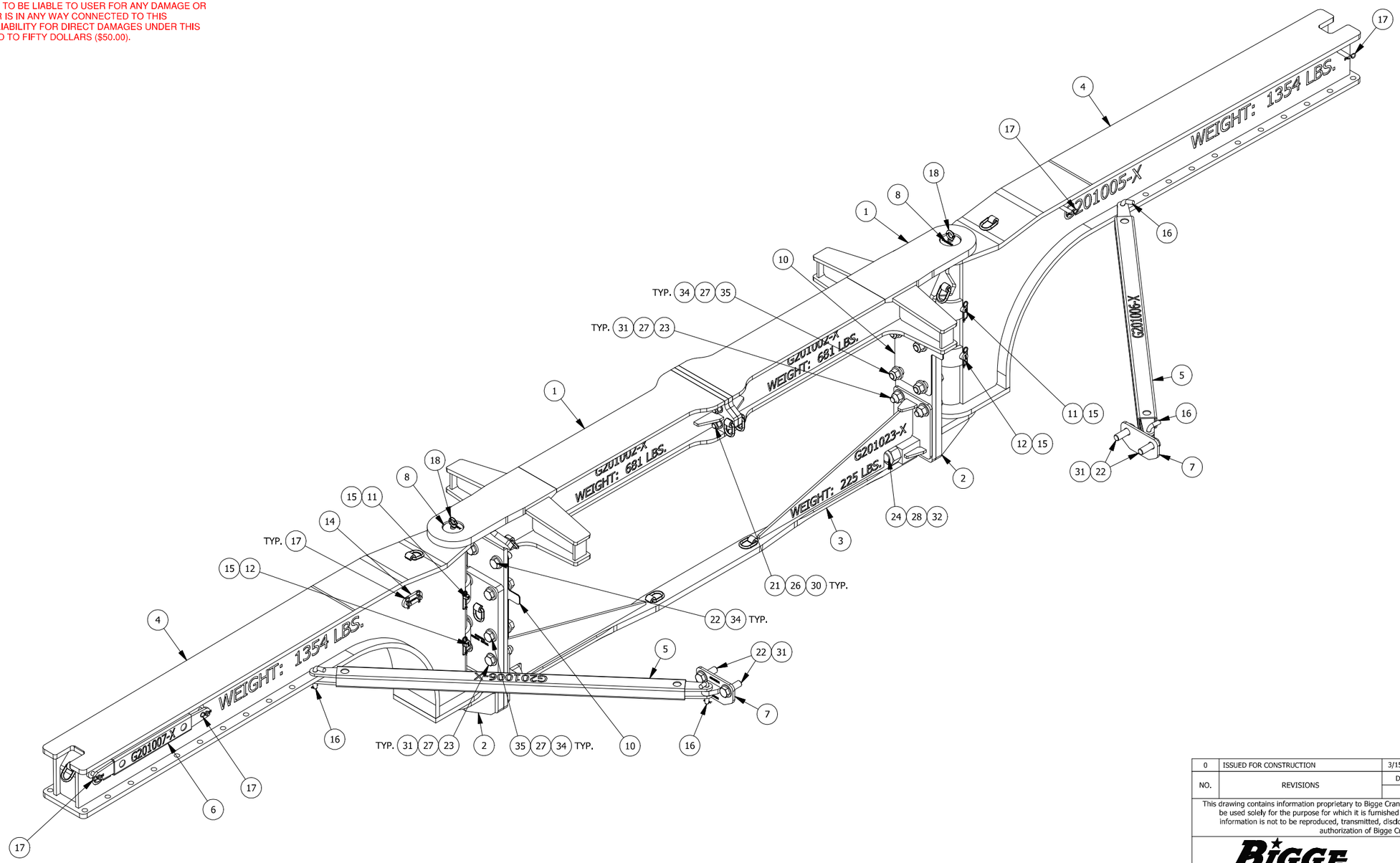

BRIDGE MODE
TOP SIDE ISOMETRIC VIEW

SWING ARMS (ITEM 4) SHOWN IN THE 90° PERPENDICULAR POSITION WITH TRAILER REMOVED FOR CLARITY

NO.	REVISIONS	DATE	BY	DATE	BY	DATE	BY
0	ISSUED FOR CONSTRUCTION	3/15/2016	MWJ	11/8/2016	VLH	11/8/2016	VLH
		DRAWN		CHECKED		APPROVED	

This drawing contains information proprietary to Bigge Crane and Rigging Co. It is submitted in confidence and is to be used solely for the purpose for which it is furnished and returned upon request. This drawing and such information is not to be reproduced, transmitted, disclosed or used in whole or in part without the written authorization of Bigge Crane and Rigging Co.

BIGGE CRANE and RIGGING CO.
Established 1916
10700 Bigge Ave., San Leandro, CA 94577
www.BIGGE.com

BIGGE EQUIPMENT ASSEMBLY
ISOMETRIC VIEW
G201022 - SWING TYPE OUTRIGGER ASSEMBLY
2 FILE TRAILER CONFIGURATION

SCALE: (U.N.O)	SIZE	PROJECT No.	DWG. No.	SHEET	REV.
NTS	B		G201022	2 of 12	1

THIS DOCUMENT IS PROVIDED "AS IS, WHERE IS" AND NO REPRESENTATIONS OR WARRANTIES ARE MADE, EXPRESSED OR IMPLIED. RELIANCE ON THE DOCUMENT IS AT THE SOLE RISK OF THE USER. TO THE EXTENT NOT PROHIBITED BY LAW, UNDER NO CIRCUMSTANCES SHALL BIGGE BE LIABLE WITH RESPECT TO THIS DOCUMENT FOR SPECIAL, INDIRECT, INCIDENTAL, OR CONSEQUENTIAL DAMAGES, INCLUDING WITHOUT LIMITATION, DAMAGES RESULTING FROM ANY INACCURACIES OR FROM LOSS OF PROFITS, BUSINESS OR GOODWILL, ON ANY THEORY OF LIABILITY, WHETHER ARISING UNDER TORT (INCLUDING NEGLIGENCE), CONTRACT OR OTHERWISE, WHETHER OR NOT BIGGE HAS BEEN ADVISED OR IS AWARE OF THE POSSIBILITY OF SUCH DAMAGES. IF, NOTWITHSTANDING ANY OTHER PROVISIONS OF THIS AGREEMENT, BIGGE IS FOUND TO BE LIABLE TO USER FOR ANY DAMAGE OR LOSS THAT ARISES OUT OF OR IS IN ANY WAY CONNECTED TO THIS DOCUMENT, BIGGE'S ENTIRE LIABILITY FOR DIRECT DAMAGES UNDER THIS AGREEMENT SHALL BE LIMITED TO FIFTY DOLLARS ($50.00).

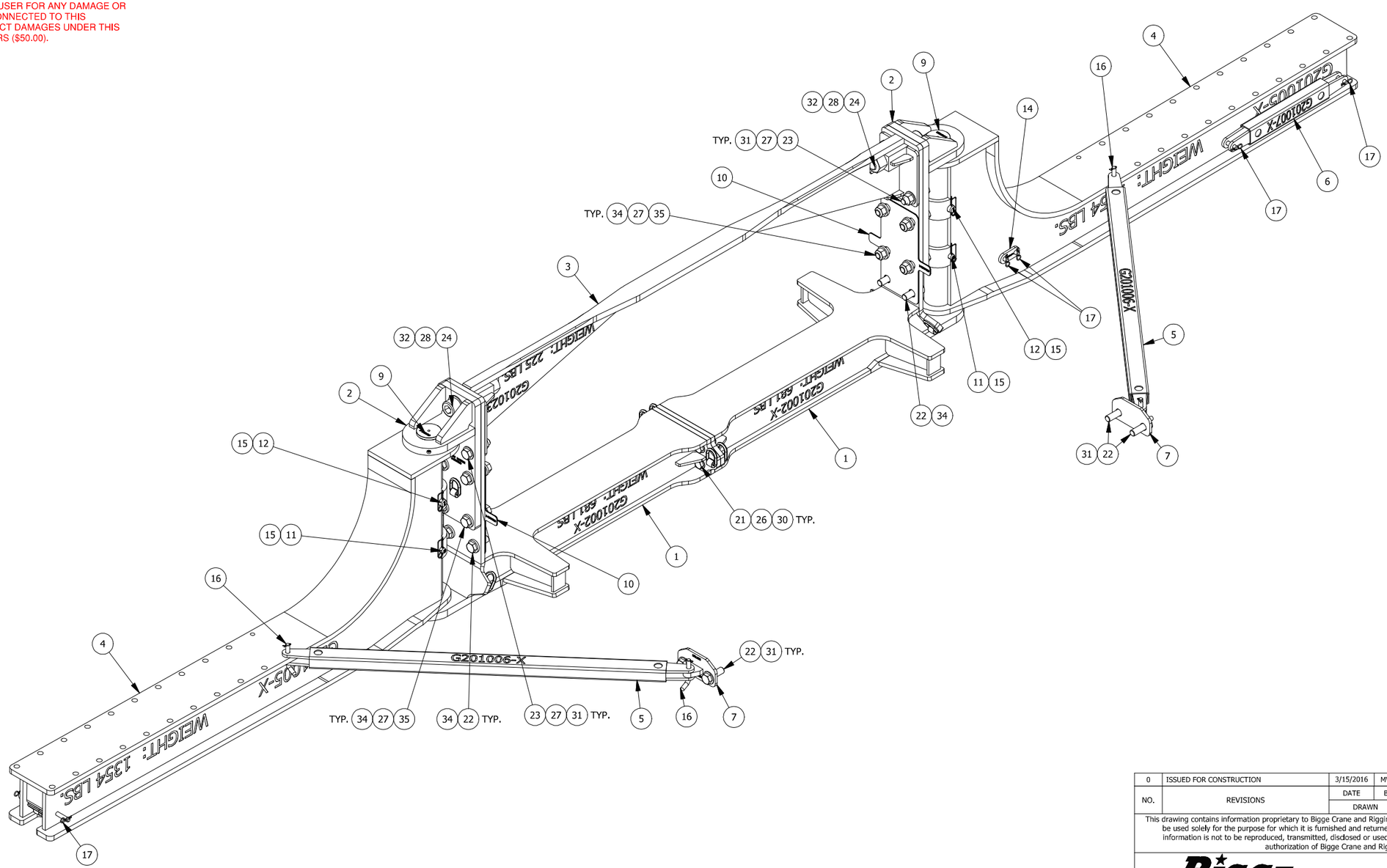

BRIDGE MODE
BOTTOM SIDE ISOMETRIC VIEW

SWING ARMS (ITEM 4) SHOWN IN THE 90° PERPENDICULAR POSITION WITH TRAILER REMOVED FOR CLARITY

NO.	REVISIONS	DATE	BY	DATE	BY	DATE	BY
0	ISSUED FOR CONSTRUCTION	3/15/2016	MWJ	11/8/2016	VLH	11/8/2016	VLH
		DRAWN		CHECKED		APPROVED	

This drawing contains information proprietary to Bigge Crane and Rigging Co. It is submitted in confidence and is to be used solely for the purpose for which it is furnished and returned upon request. This drawing and such information is not to be reproduced, transmitted, disclosed or used in whole or in part without the written authorization of Bigge Crane and Rigging Co.

BIGGE CRANE and RIGGING CO.
Established 1916
10700 Bigge Ave., San Leandro, CA 94577
www.BIGGE.com

BIGGE EQUIPMENT ASSEMBLY
ISOMETRIC VIEW
G201022 - SWING TYPE OUTRIGGER ASSEMBLY
2 FILE TRAILER CONFIGURATION

SCALE: (U.N.O)	SIZE	PROJECT No.	DWG. No.	SHEET	REV.
NTS	B		G201022	3 of 12	1

THIS DOCUMENT IS PROVIDED "AS IS, WHERE IS" AND NO REPRESENTATIONS OR WARRANTIES ARE MADE, EXPRESSED OR IMPLIED. RELIANCE ON THE DOCUMENT IS AT THE SOLE RISK OF THE USER. TO THE EXTENT NOT PROHIBITED BY LAW, UNDER NO CIRCUMSTANCES SHALL BIGGE BE LIABLE WITH RESPECT TO THIS DOCUMENT FOR SPECIAL, INDIRECT, INCIDENTAL, OR CONSEQUENTIAL DAMAGES, INCLUDING WITHOUT LIMITATION, DAMAGES RESULTING FROM ANY INACCURACIES OR FROM LOSS OF PROFITS, BUSINESS OR GOODWILL, ON ANY THEORY OF LIABILITY, WHETHER ARISING UNDER TORT (INCLUDING NEGLIGENCE), CONTRACT OR OTHERWISE, WHETHER OR NOT BIGGE HAS BEEN ADVISED OR IS AWARE OF THE POSSIBILITY OF SUCH DAMAGES. IF, NOTWITHSTANDING ANY OTHER PROVISIONS OF THIS AGREEMENT, BIGGE IS FOUND TO BE LIABLE TO USER FOR ANY DAMAGE OR LOSS THAT ARISES OUT OF OR IS IN ANY WAY CONNECTED TO THIS DOCUMENT, BIGGE'S ENTIRE LIABILITY FOR DIRECT DAMAGES UNDER THIS AGREEMENT SHALL BE LIMITED TO FIFTY DOLLARS ($50.00).

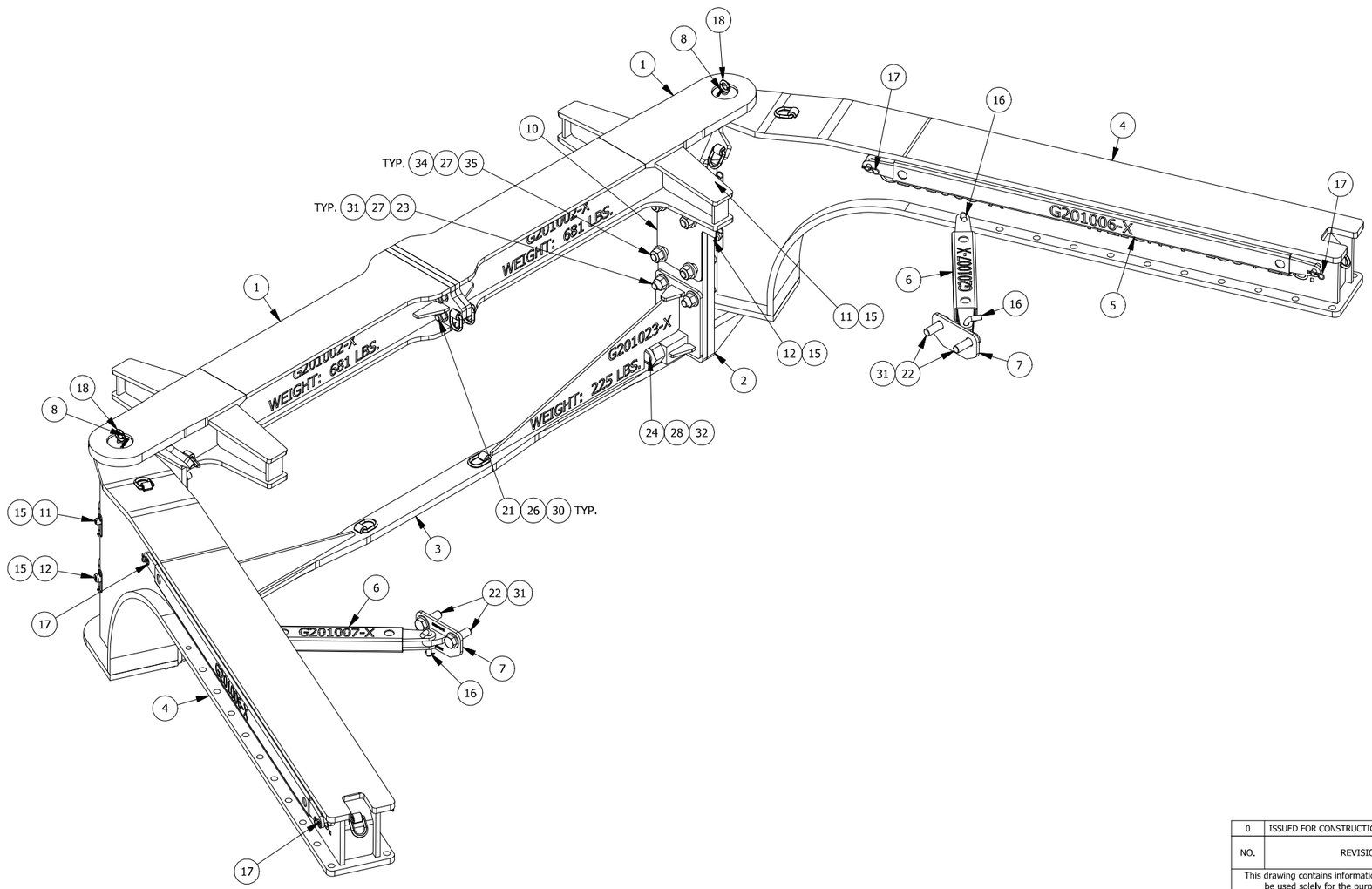

PAVEMENT MODE "A"
TOP SIDE ISOMETRIC VIEW

SWING ARMS (ITEM 4) SHOWN IN THE 24° POSITION FOR MIN. WIDTH WHEN DOLLIES ARE CARRIED WITH TRAILER REMOVED FOR CLARITY

NO.	REVISIONS	DATE	BY	DATE	BY	DATE	BY
		DRAWN		CHECKED		APPROVED	
0	ISSUED FOR CONSTRUCTION	3/15/2016	MWJ	11/8/2016	VLH	11/8/2016	VLH

This drawing contains information proprietary to Bigge Crane and Rigging Co. It is submitted in confidence and is to be used solely for the purpose for which it is furnished and returned upon request. This drawing and such information is not to be reproduced, transmitted, disclosed or used in whole or in part without the written authorization of Bigge Crane and Rigging Co.

BIGGE CRANE and RIGGING CO.
Established 1916
10700 Bigge Ave., San Leandro, CA 94577
www.BIGGE.com

BIGGE EQUIPMENT ASSEMBLY
ISOMETRIC VIEW
G201022 - SWING TYPE OUTRIGGER ASSEMBLY
2 FILE TRAILER CONFIGURATION

SCALE: (U.N.O)	SIZE	PROJECT No.	DWG. No.	SHEET	REV.
NTS	B		G201022	4 of 12	1

THIS DOCUMENT IS PROVIDED "AS IS, WHERE IS" AND NO REPRESENTATIONS OR WARRANTIES ARE MADE, EXPRESSED OR IMPLIED. RELIANCE ON THE DOCUMENT IS AT THE SOLE RISK OF THE USER. TO THE EXTENT NOT PROHIBITED BY LAW, UNDER NO CIRCUMSTANCES SHALL BIGGE BE LIABLE WITH RESPECT TO THIS DOCUMENT FOR SPECIAL, INDIRECT, INCIDENTAL, OR CONSEQUENTIAL DAMAGES, INCLUDING WITHOUT LIMITATION, DAMAGES RESULTING FROM ANY INACCURACIES OR FROM LOSS OF PROFITS, BUSINESS OR GOODWILL, ON ANY THEORY OF LIABILITY, WHETHER ARISING UNDER TORT (INCLUDING NEGLIGENCE), CONTRACT OR OTHERWISE, WHETHER OR NOT BIGGE HAS BEEN ADVISED OR IS AWARE OF THE POSSIBILITY OF SUCH DAMAGES. IF, NOTWITHSTANDING ANY OTHER PROVISIONS OF THIS AGREEMENT, BIGGE IS FOUND TO BE LIABLE TO USER FOR ANY DAMAGE OR LOSS THAT ARISES OUT OF OR IS IN ANY WAY CONNECTED TO THIS DOCUMENT, BIGGE'S ENTIRE LIABILITY FOR DIRECT DAMAGES UNDER THIS AGREEMENT SHALL BE LIMITED TO FIFTY DOLLARS ($50.00).

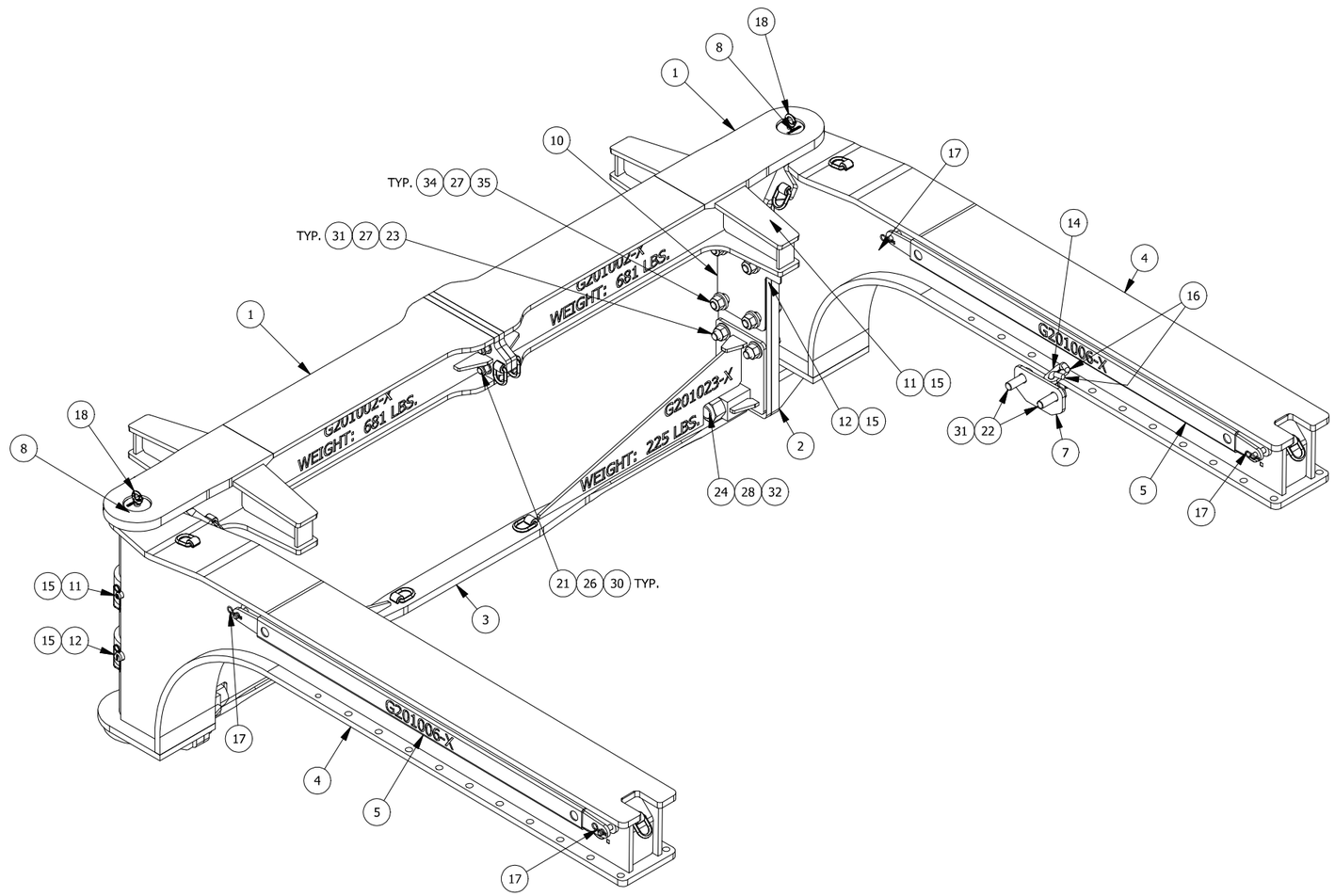

PAVEMENT MODE "B"
TOP SIDE ISOMETRIC VIEW

SWING ARMS (ITEM 4) SHOWN IN THE 0° PARALLEL TO SIDES OF TRAILER POSITION (MIN. WIDTH, NO DOLLIES) WITH TRAILER REMOVED FOR CLARITY

NO.	REVISIONS	DATE	BY	DATE	BY	DATE	BY
		DRAWN		CHECKED		APPROVED	
0	ISSUED FOR CONSTRUCTION	3/15/2016	MWJ	11/8/2016	VLH	11/8/2016	VLH

This drawing contains information proprietary to Bigge Crane and Rigging Co. It is submitted in confidence and is to be used solely for the purpose for which it is furnished and returned upon request. This drawing and such information is not to be reproduced, transmitted, disclosed or used in whole or in part without the written authorization of Bigge Crane and Rigging Co.

BIGGE CRANE and RIGGING CO.
Established 1916
10700 Bigge Ave., San Leandro, CA 94577
www.BIGGE.com

BIGGE EQUIPMENT ASSEMBLY
ISOMETRIC VIEW
G201022 - SWING TYPE OUTRIGGER ASSEMBLY
2 FILE TRAILER CONFIGURATION

SCALE: (U.N.O)	SIZE	PROJECT No.	DWG. No.	SHEET	REV.
NTS	B		G201022	5 of 12	1

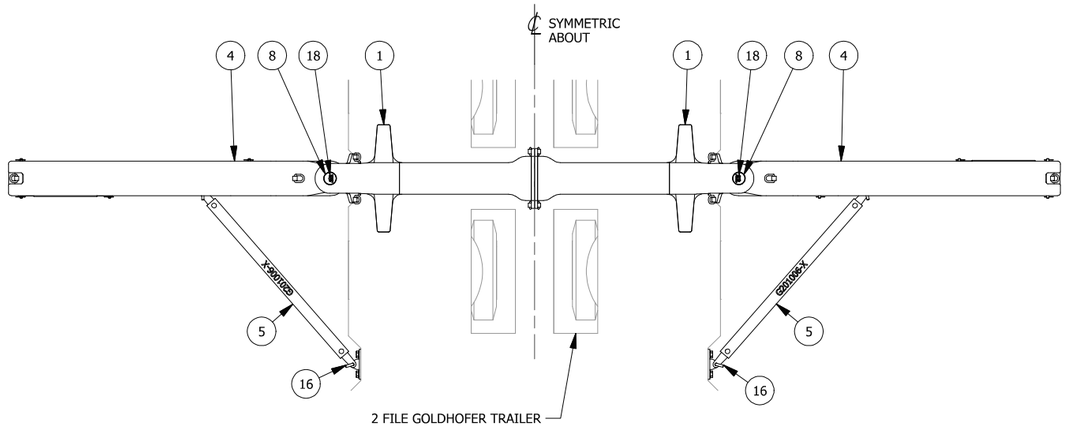

BRIDGE MODE PLAN VIEW

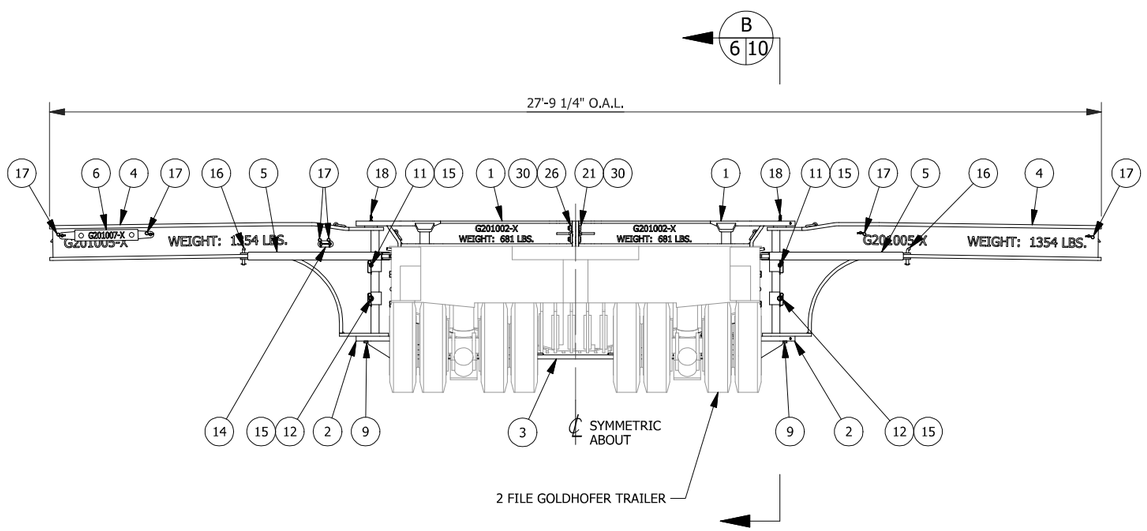

BRIDGE MODE FRONT ELEVATION VIEW

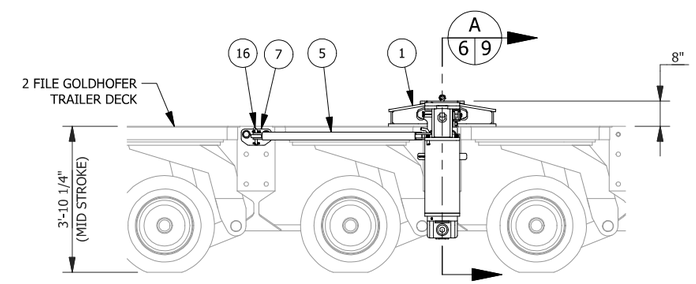

BRIDGE MODE SIDE ELEVATION VIEW

THIS DOCUMENT IS PROVIDED "AS IS, WHERE IS" AND NO REPRESENTATIONS OR WARRANTIES ARE MADE, EXPRESSED OR IMPLIED. RELIANCE ON THE DOCUMENT IS AT THE SOLE RISK OF THE USER. TO THE EXTENT NOT PROHIBITED BY LAW, UNDER NO CIRCUMSTANCES SHALL BIGGE BE LIABLE WITH RESPECT TO THIS DOCUMENT FOR SPECIAL, INDIRECT, INCIDENTAL, OR CONSEQUENTIAL DAMAGES, INCLUDING WITHOUT LIMITATION, DAMAGES RESULTING FROM ANY INACCURACIES OR FROM LOSS OF PROFITS, BUSINESS OR GOODWILL, ON ANY THEORY OF LIABILITY, WHETHER ARISING UNDER TORT (INCLUDING NEGLIGENCE), CONTRACT OR OTHERWISE, WHETHER OR NOT BIGGE HAS BEEN ADVISED OR IS AWARE OF THE POSSIBILITY OF SUCH DAMAGES. IF, NOTWITHSTANDING ANY OTHER PROVISIONS OF THIS AGREEMENT, BIGGE IS FOUND TO BE LIABLE TO USER FOR ANY DAMAGE OR LOSS THAT ARISES OUT OF OR IS IN ANY WAY CONNECTED TO THIS DOCUMENT, BIGGE'S ENTIRE LIABILITY FOR DIRECT DAMAGES UNDER THIS AGREEMENT SHALL BE LIMITED TO FIFTY DOLLARS ($50.00).

NO.	REVISIONS	DATE	BY	DATE	BY	DATE	BY
		DRAWN		CHECKED		APPROVED	
0	ISSUED FOR CONSTRUCTION	3/15/2016	MWJ	11/8/2016	VLH	11/8/2016	VLH

This drawing contains information proprietary to Bigge Crane and Rigging Co. It is submitted in confidence and is to be used solely for the purpose for which it is furnished and returned upon request. This drawing and such information is not to be reproduced, transmitted, disclosed or used in whole or in part without the written authorization of Bigge Crane and Rigging Co.

BIGGE CRANE and RIGGING CO.
Established 1916
10700 Bigge Ave., San Leandro, CA 94577
www.BIGGE.com

BIGGE EQUIPMENT ASSEMBLY
ORTHO VIEWS
G201022 - SWING TYPE OUTRIGGER ASSEMBLY
2 FILE TRAILER CONFIGURATION

SCALE: (U.N.O)	SIZE	PROJECT No.	DWG. No.	SHEET	REV.
1/4"=1'-0"	B		G201022	6 of 12	1

THIS DOCUMENT IS PROVIDED "AS IS, WHERE IS" AND NO REPRESENTATIONS OR WARRANTIES ARE MADE, EXPRESSED OR IMPLIED. RELIANCE ON THE DOCUMENT IS AT THE SOLE RISK OF THE USER. TO THE EXTENT NOT PROHIBITED BY LAW, UNDER NO CIRCUMSTANCES SHALL BIGGE BE LIABLE WITH RESPECT TO THIS DOCUMENT FOR SPECIAL, INDIRECT, INCIDENTAL, OR CONSEQUENTIAL DAMAGES, INCLUDING WITHOUT LIMITATION, DAMAGES RESULTING FROM ANY INACCURACIES OR FROM LOSS OF PROFITS, BUSINESS OR GOODWILL, ON ANY THEORY OF LIABILITY, WHETHER ARISING UNDER TORT (INCLUDING NEGLIGENCE), CONTRACT OR OTHERWISE, WHETHER OR NOT BIGGE HAS BEEN ADVISED OR IS AWARE OF THE POSSIBILITY OF SUCH DAMAGES. IF, NOTWITHSTANDING ANY OTHER PROVISIONS OF THIS AGREEMENT, BIGGE IS FOUND TO BE LIABLE TO USER FOR ANY DAMAGE OR LOSS THAT ARISES OUT OF OR IS IN ANY WAY CONNECTED TO THIS DOCUMENT, BIGGE'S ENTIRE LIABILITY FOR DIRECT DAMAGES UNDER THIS AGREEMENT SHALL BE LIMITED TO FIFTY DOLLARS ($50.00).

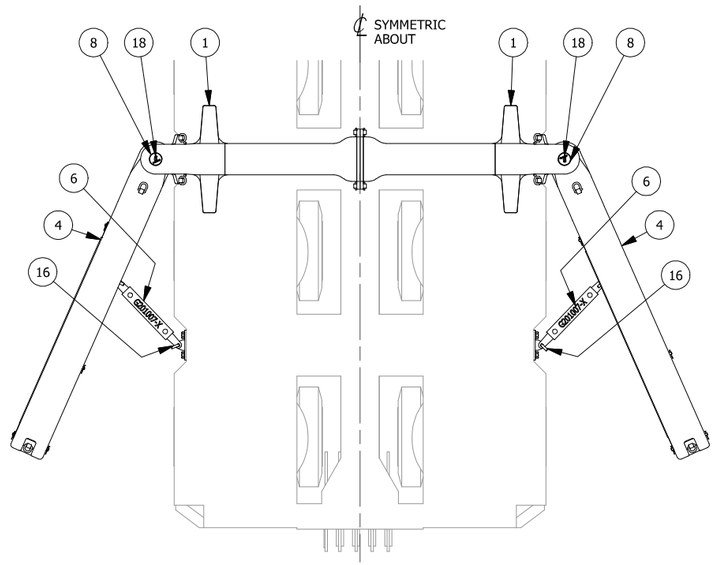

PAVEMENT MODE "A" PLAN VIEW

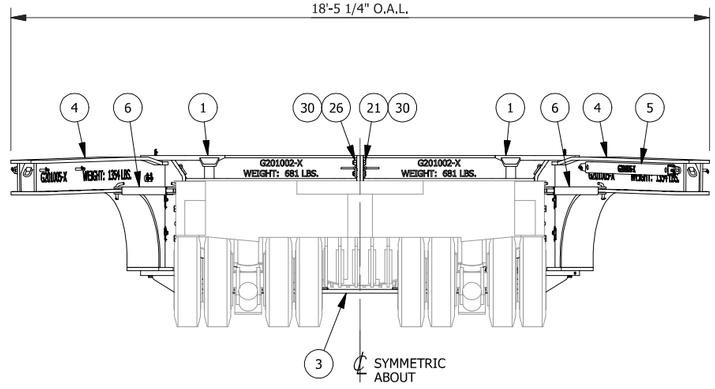

PAVEMENT MODE "A" FRONT ELEVATION VIEW

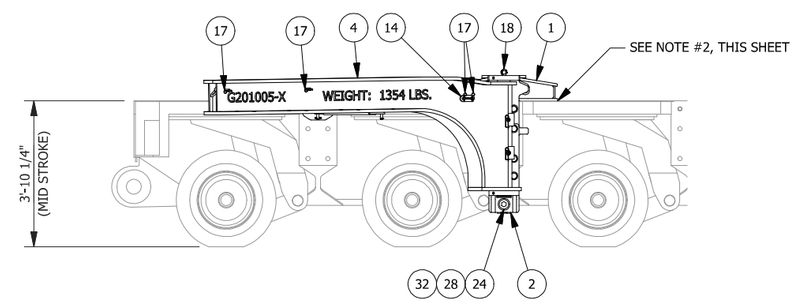

PAVEMENT MODE "A" SIDE ELEVATION VIEW

NOTES:

1. FOR DOLLIES TO BE CARRIED , COMPRESSION CHORD "WINGS" SHALL BEAR (OR BE SHIMMED TO BEAR) ON TRAILER DECK. INSTALL SHIMS AFTER CONNECTION BOLTS HAVE BEEN TORQUED.

NO.	REVISIONS	DATE	BY	DATE	BY	DATE	BY
0	ISSUED FOR CONSTRUCTION	3/15/2016	MWJ	11/8/2016	VLH	11/8/2016	VLH
		DRAWN		CHECKED		APPROVED	

This drawing contains information proprietary to Bigge Crane and Rigging Co. It is submitted in confidence and is to be used solely for the purpose for which it is furnished and returned upon request. This drawing and such information is not to be reproduced, transmitted, disclosed or used in whole or in part without the written authorization of Bigge Crane and Rigging Co.

BIGGE CRANE and RIGGING CO.
Established 1916
10700 Bigge Ave., San Leandro, CA 94577
www.BIGGE.com

BIGGE EQUIPMENT ASSEMBLY
ORTHO VIEWS
G201022 - SWING TYPE OUTRIGGER ASSEMBLY
2 FILE TRAILER CONFIGURATION

SCALE: (U.N.O)	SIZE	PROJECT No.	DWG. No.	SHEET	REV.
1/4"=1'-0"	B		G201022	7 of 12	1

THIS DOCUMENT IS PROVIDED "AS IS, WHERE IS" AND NO REPRESENTATIONS OR WARRANTIES ARE MADE, EXPRESSED OR IMPLIED, RELIANCE ON THE DOCUMENT IS AT THE SOLE RISK OF THE USER. TO THE EXTENT NOT PROHIBITED BY LAW, UNDER NO CIRCUMSTANCES SHALL BIGGE BE LIABLE WITH RESPECT TO THIS DOCUMENT FOR SPECIAL, INDIRECT, INCIDENTAL, OR CONSEQUENTIAL DAMAGES, INCLUDING WITHOUT LIMITATION, DAMAGES RESULTING FROM ANY INACCURACIES OR FROM LOSS OF PROFITS, BUSINESS OR GOODWILL, ON ANY THEORY OF LIABILITY, WHETHER ARISING UNDER TORT (INCLUDING NEGLIGENCE), CONTRACT OR OTHERWISE, WHETHER OR NOT BIGGE HAS BEEN ADVISED OR IS AWARE OF THE POSSIBILITY OF SUCH DAMAGES. IF, NOTWITHSTANDING ANY OTHER PROVISIONS OF THIS AGREEMENT, BIGGE IS FOUND TO BE LIABLE TO USER FOR ANY DAMAGE OR LOSS THAT ARISES OUT OF OR IS IN ANY WAY CONNECTED TO THIS DOCUMENT, BIGGE'S ENTIRE LIABILITY FOR DIRECT DAMAGES UNDER THIS AGREEMENT SHALL BE LIMITED TO FIFTY DOLLARS ($50.00).

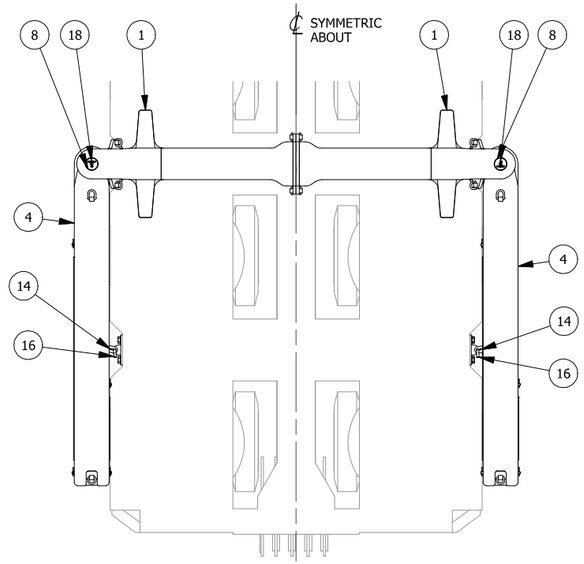

PAVEMENT MODE "B" PLAN VIEW

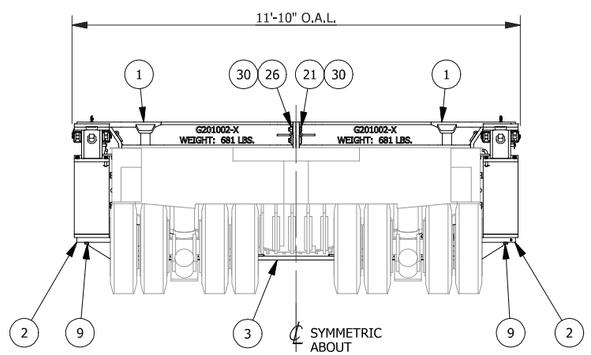

PAVEMENT MODE "B" FRONT ELEVATION VIEW

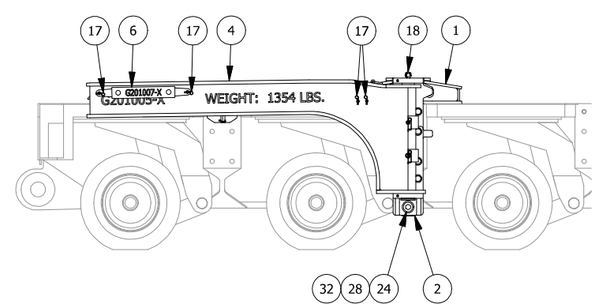

PAVEMENT MODE "B" SIDE ELEVATION VIEW

NO.	REVISIONS	DATE	BY	DATE	BY	DATE	BY
0	ISSUED FOR CONSTRUCTION	3/15/2016	MWJ	11/8/2016	VLH	11/8/2016	VLH
		DRAWN		CHECKED		APPROVED	

This drawing contains information proprietary to Bigge Crane and Rigging Co. It is submitted in confidence and is to be used solely for the purpose for which it is furnished and returned upon request. This drawing and such information is not to be reproduced, transmitted, disclosed or used in whole or in part without the written authorization of Bigge Crane and Rigging Co.

BIGGE CRANE and RIGGING CO.
10700 Bigge Ave., San Leandro, CA 94577
www.BIGGE.com
Established 1916

BIGGE EQUIPMENT ASSEMBLY
ORTHO VIEWS
G201022 - SWING TYPE OUTRIGGER ASSEMBLY
2 FILE TRAILER CONFIGURATION

SCALE: (U.N.O)	SIZE	PROJECT No.	DWG. No.	SHEET	REV.
1/4"=1'-0"	B		G201022	8 of 12	1

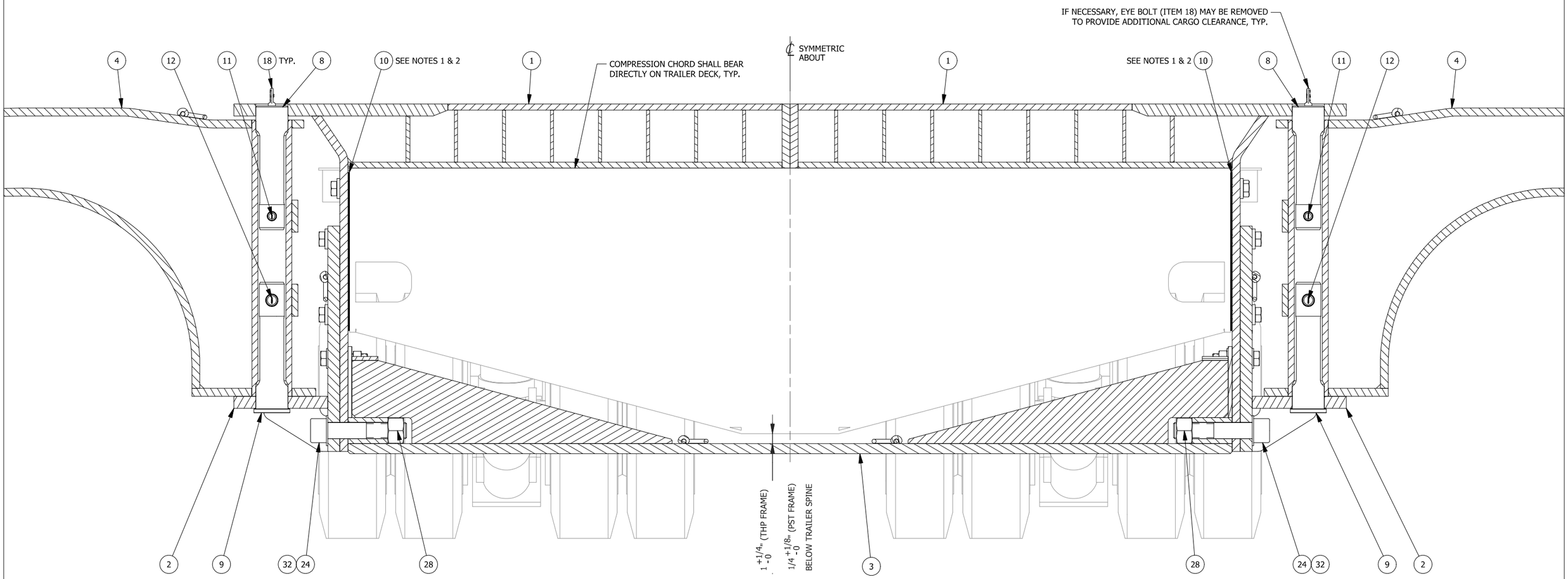

A 6 9 **SECTION**
SCALE: 1" = 1'-0"

NOTES:

1. MODULAR TRAILER TRANSVERSE FRAME WIDTHS VARY. THE OUTRIGGER FRAME IS DESIGNED TO ACCOMMODATE THIS ISSUE BY USING SHIMS.
2. THE SHIM QUANTITY SHALL BE FIELD DETERMINED. AFTER SHIMMING AND PRIOR TO CAP SCREW PRE-TENSIONING, ANY REMAINING GAP SHALL NOT EXCEED 1/16" AT EACH TRAILER FRAME CONNECTION POINT. AFTER PRE-TENSIONING NO GAPS SHALL EXIST. SHIM QUANTITY VARIANCE BETWEEN THE TWO FRAME CONNECTION POINTS SHALL NOT EXCEED (1) SHIM (ITEM 10).

THIS DOCUMENT IS PROVIDED "AS IS, WHERE IS" AND NO REPRESENTATIONS OR WARRANTIES ARE MADE, EXPRESSED OR IMPLIED. RELIANCE ON THE DOCUMENT IS AT THE SOLE RISK OF THE USER. TO THE EXTENT NOT PROHIBITED BY LAW, UNDER NO CIRCUMSTANCES SHALL BIGGE BE LIABLE WITH RESPECT TO THIS DOCUMENT FOR SPECIAL, INDIRECT, INCIDENTAL, OR CONSEQUENTIAL DAMAGES, INCLUDING WITHOUT LIMITATION, DAMAGES RESULTING FROM ANY INACCURACIES OR FROM LOSS OF PROFITS, BUSINESS OR GOODWILL, ON ANY THEORY OF LIABILITY, WHETHER ARISING UNDER TORT (INCLUDING NEGLIGENCE), CONTRACT OR OTHERWISE, WHETHER OR NOT BIGGE HAS BEEN ADVISED OR IS AWARE OF THE POSSIBILITY OF SUCH DAMAGES. IF, NOTWITHSTANDING ANY OTHER PROVISIONS OF THIS AGREEMENT, BIGGE IS FOUND TO BE LIABLE TO USER FOR ANY DAMAGE OR LOSS THAT ARISES OUT OF OR IS IN ANY WAY CONNECTED TO THIS DOCUMENT, BIGGE'S ENTIRE LIABILITY FOR DIRECT DAMAGES UNDER THIS AGREEMENT SHALL BE LIMITED TO FIFTY DOLLARS ($50.00).

NO.	REVISIONS	DATE	BY	DATE	BY	DATE	BY
		DRAWN		CHECKED		APPROVED	
0	ISSUED FOR CONSTRUCTION	3/15/2016	MWJ	11/8/2016	VLH	11/8/2016	VLH

This drawing contains information proprietary to Bigge Crane and Rigging Co. It is submitted in confidence and is to be used solely for the purpose for which it is furnished and returned upon request. This drawing and such information is not to be reproduced, transmitted, disclosed or used in whole or in part without the written authorization of Bigge Crane and Rigging Co.

BIGGE CRANE and RIGGING CO.
Established 1916
10700 Bigge Ave., San Leandro, CA 94577
www.BIGGE.com

BIGGE EQUIPMENT ASSEMBLY
SECTION & DETAIL VIEWS
G201022 - SWING TYPE OUTRIGGER ASSEMBLY
2 FILE TRAILER CONFIGURATION

SCALE: (U.N.O)	SIZE	PROJECT No.	DWG. No.	SHEET	REV.
AS NOTED	B		G201022	9 of 12	1

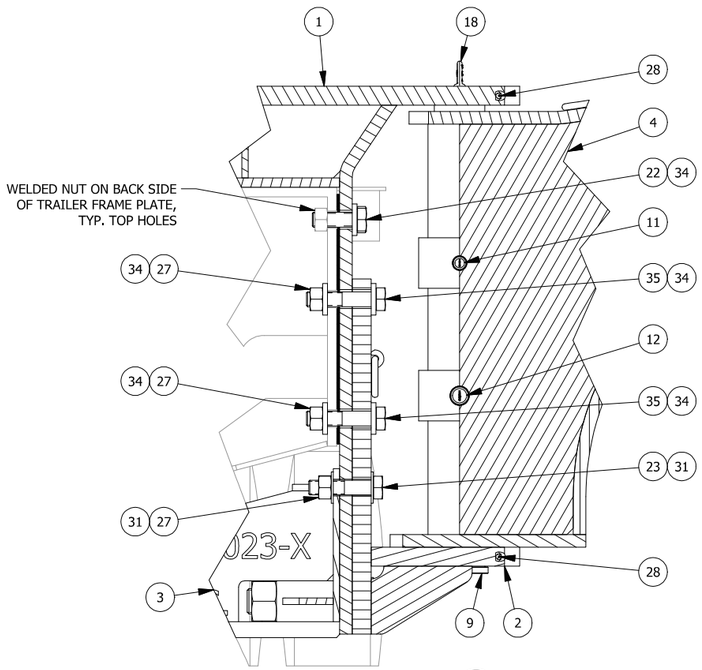

C 10|10 **SECTION**
SCALE: 1" = 1'-0"

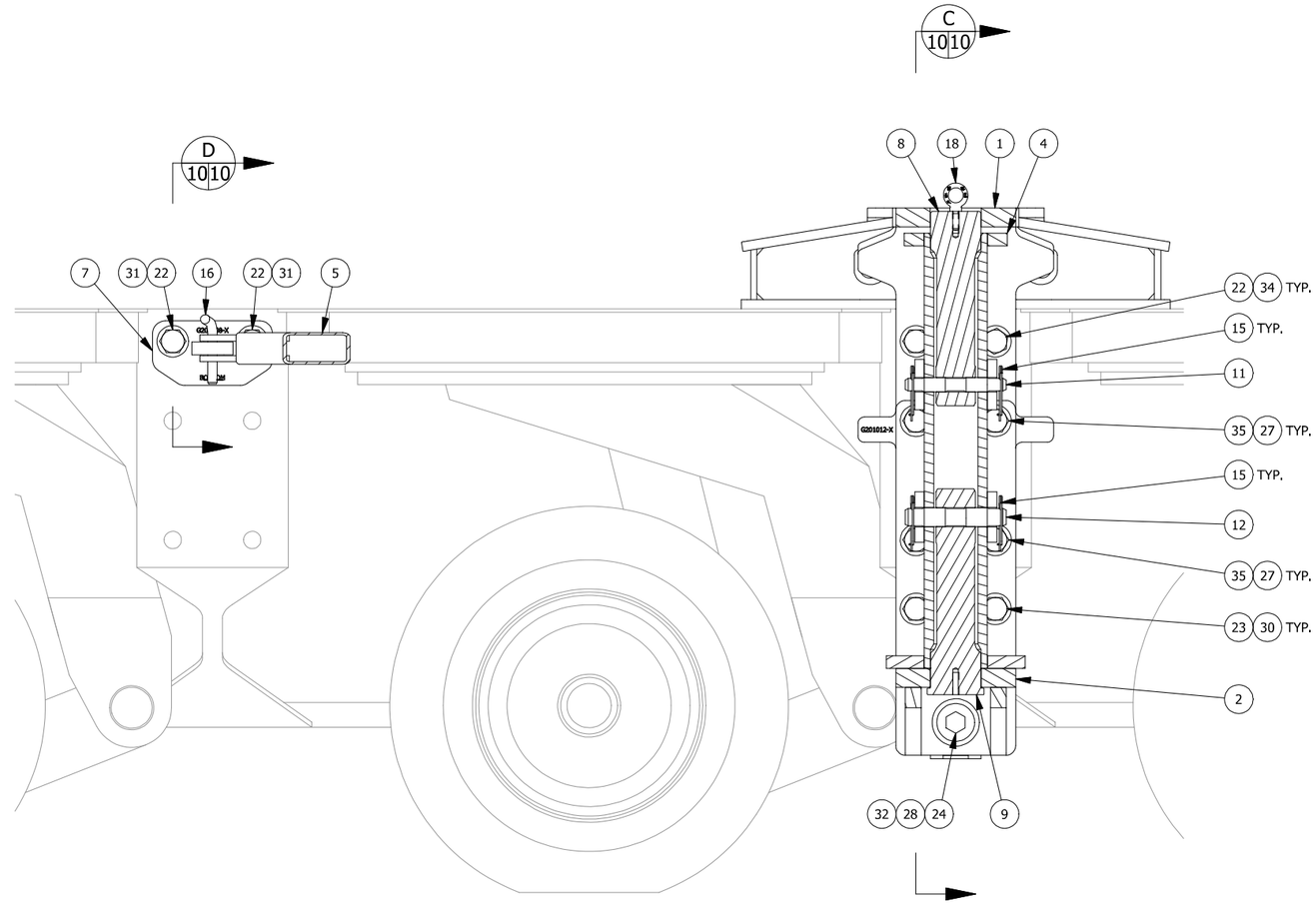

B 6|10 **SECTION**
SCALE: 1" = 1'-0"

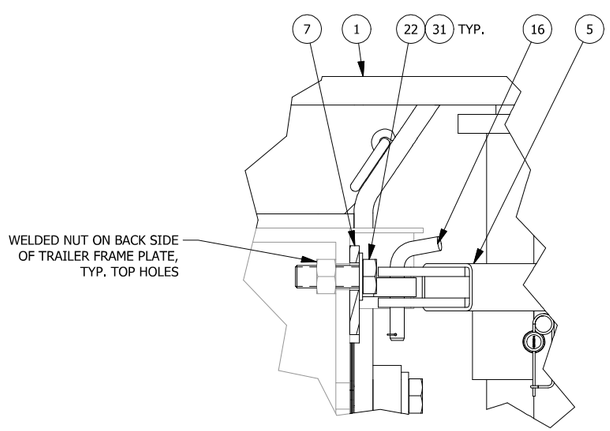

D 10|10 **SECTION**
SCALE: 1 1/2" = 1'-0"

THIS DOCUMENT IS PROVIDED "AS IS, WHERE IS" AND NO REPRESENTATIONS OR WARRANTIES ARE MADE, EXPRESSED OR IMPLIED. RELIANCE ON THE DOCUMENT IS AT THE SOLE RISK OF THE USER. TO THE EXTENT NOT PROHIBITED BY LAW, UNDER NO CIRCUMSTANCES SHALL BIGGE BE LIABLE WITH RESPECT TO THIS DOCUMENT FOR SPECIAL, INDIRECT, INCIDENTAL, OR CONSEQUENTIAL DAMAGES, INCLUDING WITHOUT LIMITATION, DAMAGES RESULTING FROM ANY INACCURACIES OR FROM LOSS OF PROFITS, BUSINESS OR GOODWILL, ON ANY THEORY OF LIABILITY, WHETHER ARISING UNDER TORT (INCLUDING NEGLIGENCE), CONTRACT OR OTHERWISE, WHETHER OR NOT BIGGE HAS BEEN ADVISED OR IS AWARE OF THE POSSIBILITY OF SUCH DAMAGES. IF, NOTWITHSTANDING ANY OTHER PROVISIONS OF THIS AGREEMENT, BIGGE IS FOUND TO BE LIABLE TO USER FOR ANY DAMAGE OR LOSS THAT ARISES OUT OF OR IS IN ANY WAY CONNECTED TO THIS DOCUMENT, BIGGE'S ENTIRE LIABILITY FOR DIRECT DAMAGES UNDER THIS AGREEMENT SHALL BE LIMITED TO FIFTY DOLLARS ($50.00).

NO.	REVISIONS	DATE	BY	DATE	BY	DATE	BY
0	ISSUED FOR CONSTRUCTION	3/15/2016	MWJ	11/8/2016	VLH	11/8/2016	VLH
		DRAWN		CHECKED		APPROVED	

This drawing contains information proprietary to Bigge Crane and Rigging Co. It is submitted in confidence and is to be used solely for the purpose for which it is furnished and returned upon request. This drawing and such information is not to be reproduced, transmitted, disclosed or used in whole or in part without the written authorization of Bigge Crane and Rigging Co.

BIGGE CRANE and RIGGING CO.
Established 1916
10700 Bigge Ave., San Leandro, CA 94577
www.BIGGE.com

BIGGE EQUIPMENT ASSEMBLY
SECTION VIEWS
G201022 - SWING TYPE OUTRIGGER ASSEMBLY
2 FILE TRAILER CONFIGURATION

SCALE: (U.N.O)	SIZE	PROJECT No.	DWG. No.	SHEET	REV.
AS NOTED	B		G201022	10 of 12	1

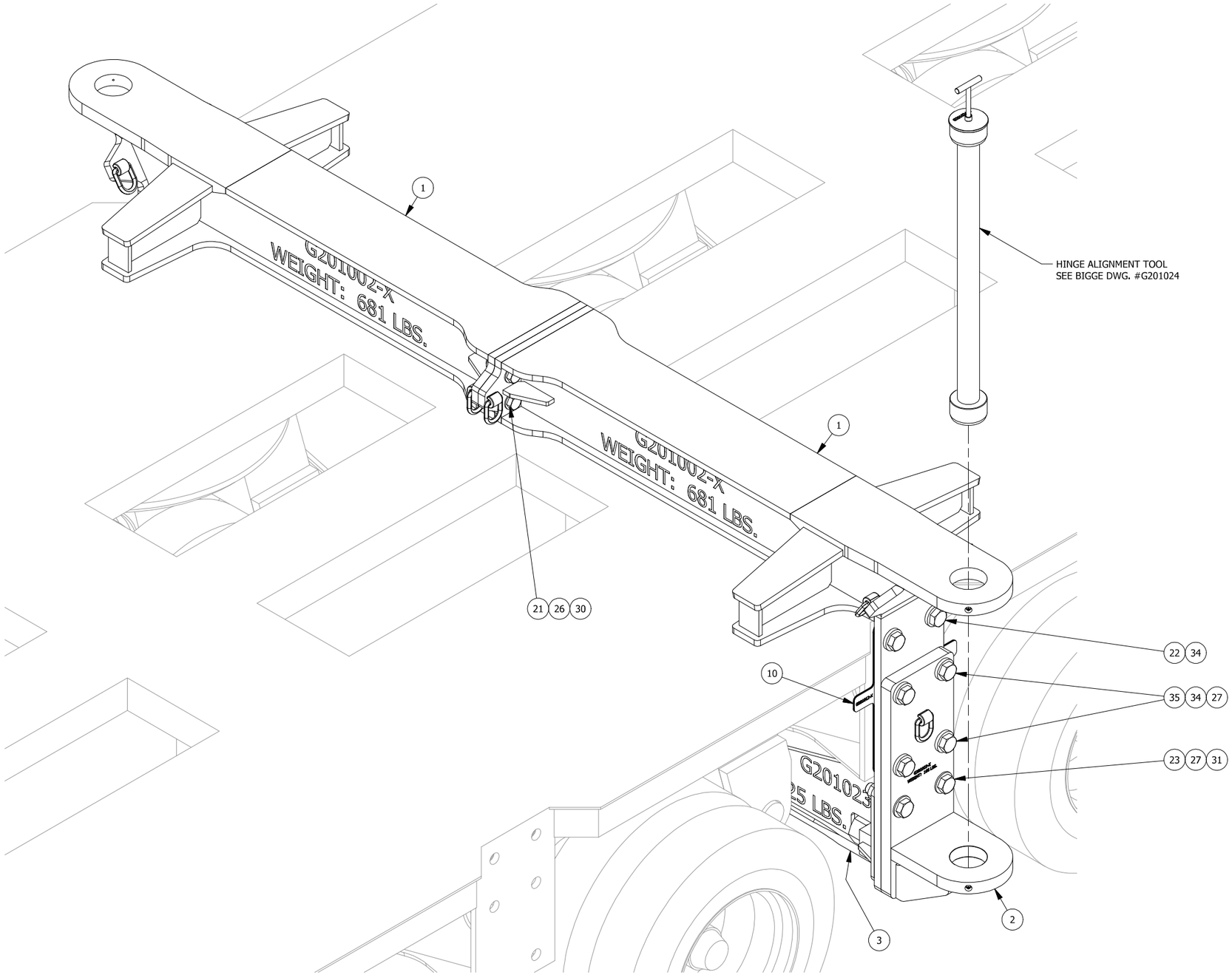

ISOMETRIC VIEW

HINGE ALIGNMENT TOOL PROCEDURE:

1. ASSEMBLE COMPRESSION CHORDS (ITEM 1) WITH SPECIFIED HARDWARE AND TORQUE TO VALUES INDICATED IN BOLT TORQUE TABLE ON SHEET 1.
2. PLACE ASSEMBLED COMPRESSION CHORDS IN APPROPRIATE LOCATION ON TRAILER DECK TO DETERMINE THE REQUIRED NUMBER OF SHIMS (ITEM 10).
3. ASSEMBLE BOTTOM HINGES (ITEM 2) AND TENSION CHORD (ITEM 3) USING SPECIFIED HARDWARE. AT THIS POINT, HARDWARE SHALL BE FINGER TIGHT ONLY.
4. INSTALL HINGE ALIGNMENT TOOL TO ALIGN THE BORES OF THE COMPRESSION CHORD AND BOTTOM HINGE.
5. TORQUE THE REMAINING HARDWARE PER NOTE 18 AND TO VALUES INDICATED IN BOLT TORQUE TABLE ON SHEET 1.
6. ONCE ALL HARDWARE HAS BEEN PROPERLY TORQUED, REMOVE THE HINGE ALIGNMENT TOOL, AND INSTALL THE SWING ARM (ITEM 4), TOP PIVOT PIN (ITEM 8), AND BOTTOM PIVOT PIN (ITEM 9).

THIS DOCUMENT IS PROVIDED "AS IS, WHERE IS" AND NO REPRESENTATIONS OR WARRANTIES ARE MADE, EXPRESSED OR IMPLIED. RELIANCE ON THE DOCUMENT IS AT THE SOLE RISK OF THE USER. TO THE EXTENT NOT PROHIBITED BY LAW, UNDER NO CIRCUMSTANCES SHALL BIGGE BE LIABLE WITH RESPECT TO THIS DOCUMENT FOR SPECIAL, INDIRECT, INCIDENTAL, OR CONSEQUENTIAL DAMAGES, INCLUDING WITHOUT LIMITATION, DAMAGES RESULTING FROM ANY INACCURACIES OR FROM LOSS OF PROFITS, BUSINESS OR GOODWILL, ON ANY THEORY OF LIABILITY, WHETHER ARISING UNDER TORT (INCLUDING NEGLIGENCE), CONTRACT OR OTHERWISE, WHETHER OR NOT BIGGE HAS BEEN ADVISED OR IS AWARE OF THE POSSIBILITY OF SUCH DAMAGES. IF, NOTWITHSTANDING ANY OTHER PROVISIONS OF THIS AGREEMENT, BIGGE IS FOUND TO BE LIABLE TO USER FOR ANY DAMAGE OR LOSS THAT ARISES OUT OF OR IS IN ANY WAY CONNECTED TO THIS DOCUMENT, BIGGE'S ENTIRE LIABILITY FOR DIRECT DAMAGES UNDER THIS AGREEMENT SHALL BE LIMITED TO FIFTY DOLLARS ($50.00).

NO.	REVISIONS	DATE	BY	DATE	BY	DATE	BY
		DRAWN		CHECKED		APPROVED	
0	ISSUED FOR CONSTRUCTION	3/15/2016	MWJ	11/8/2016	VLH	11/8/2016	VLH

This drawing contains information proprietary to Bigge Crane and Rigging Co. It is submitted in confidence and is to be used solely for the purpose for which it is furnished and returned upon request. This drawing and such information is not to be reproduced, transmitted, disclosed or used in whole or in part without the written authorization of Bigge Crane and Rigging Co.

BIGGE CRANE and RIGGING CO.
Established 1916
10700 Bigge Ave., San Leandro, CA 94577
www.BIGGE.com

BIGGE EQUIPMENT ASSEMBLY
ISOMETRIC VIEW - HINGE ALIGNMENT TOOL INSTALL
G201022 - SWING TYPE OUTRIGGER ASSEMBLY
2 FILE TRAILER CONFIGURATION

SCALE: (U.N.O)	SIZE	PROJECT No.	DWG. No.	SHEET	REV.
NTS	B		G201022	11 of 12	1

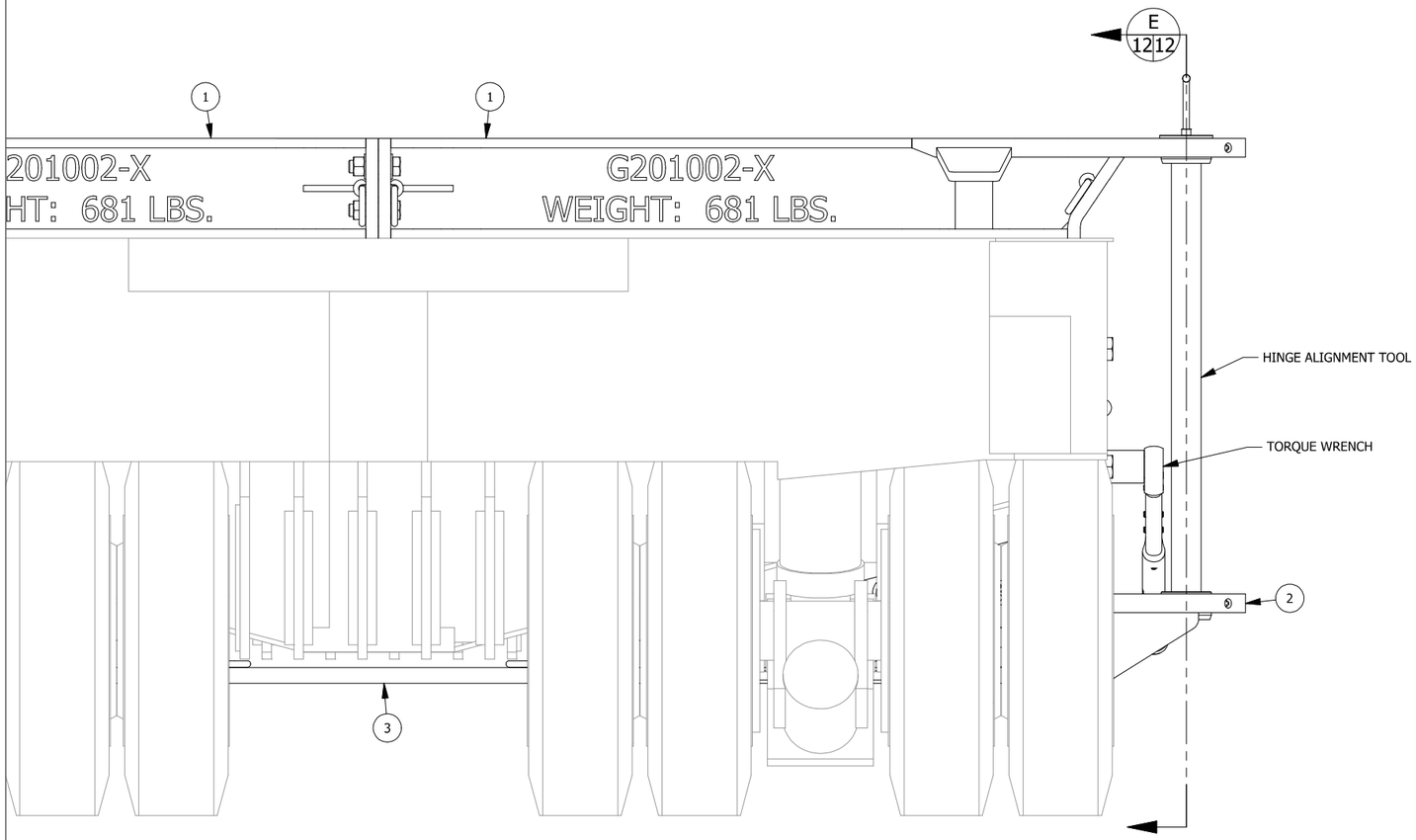

FRONT ELEVATION VIEW

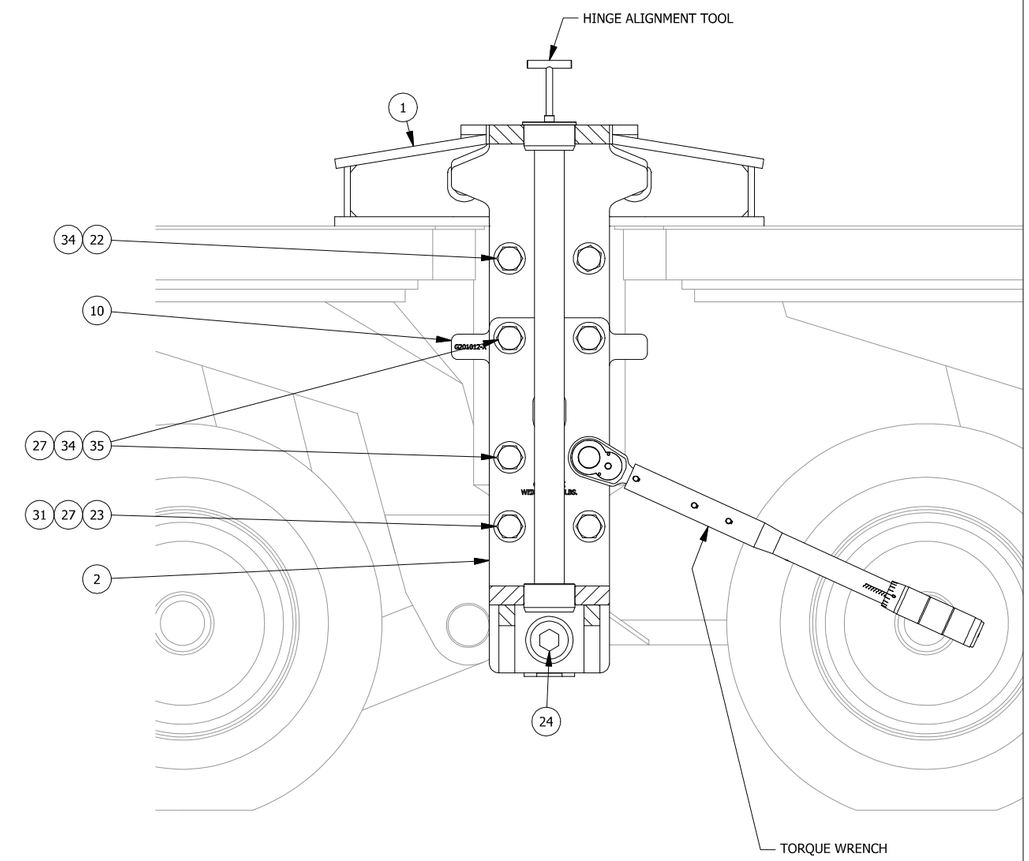

E 12 12 SECTION

THIS DOCUMENT IS PROVIDED "AS IS, WHERE IS" AND NO REPRESENTATIONS OR WARRANTIES ARE MADE, EXPRESSED OR IMPLIED. RELIANCE ON THE DOCUMENT IS AT THE SOLE RISK OF THE USER. TO THE EXTENT NOT PROHIBITED BY LAW, UNDER NO CIRCUMSTANCES SHALL BIGGE BE LIABLE WITH RESPECT TO THIS DOCUMENT FOR SPECIAL, INDIRECT, INCIDENTAL, OR CONSEQUENTIAL DAMAGES, INCLUDING WITHOUT LIMITATION, DAMAGES RESULTING FROM ANY INACCURACIES OR FROM LOSS OF PROFITS, BUSINESS OR GOODWILL, ON ANY THEORY OF LIABILITY, WHETHER ARISING UNDER TORT (INCLUDING NEGLIGENCE), CONTRACT OR OTHERWISE, WHETHER OR NOT BIGGE HAS BEEN ADVISED OR IS AWARE OF THE POSSIBILITY OF SUCH DAMAGES. IF, NOTWITHSTANDING ANY OTHER PROVISIONS OF THIS AGREEMENT, BIGGE IS FOUND TO BE LIABLE TO USER FOR ANY DAMAGE OR LOSS THAT ARISES OUT OF OR IS IN ANY WAY CONNECTED TO THIS DOCUMENT, BIGGE'S ENTIRE LIABILITY FOR DIRECT DAMAGES UNDER THIS AGREEMENT SHALL BE LIMITED TO FIFTY DOLLARS ($50.00).

NO.	REVISIONS	DATE	BY	DATE	BY	DATE	BY
		DRAWN		CHECKED		APPROVED	
0	ISSUED FOR CONSTRUCTION	3/15/2016	MWJ	11/8/2016	VLH	11/8/2016	VLH

This drawing contains information proprietary to Bigge Crane and Rigging Co. It is submitted in confidence and is to be used solely for the purpose for which it is furnished and returned upon request. This drawing and such information is not to be reproduced, transmitted, disclosed or used in whole or in part without the written authorization of Bigge Crane and Rigging Co.

BIGGE CRANE and RIGGING CO.
Established 1916
10700 Bigge Ave., San Leandro, CA 94577
www.BIGGE.com

BIGGE EQUIPMENT ASSEMBLY
ORTHO & SECTION VIEWS - HINGE ALIGNMENT TOOL INSTALL
G201022 - SWING TYPE OUTRIGGER ASSEMBLY
2 FILE TRAILER CONFIGURATION

SCALE: (U.N.O)	SIZE	PROJECT No.	DWG. No.	SHEET	REV.
1"=1'-0"	B		G201022	12 of 12	1