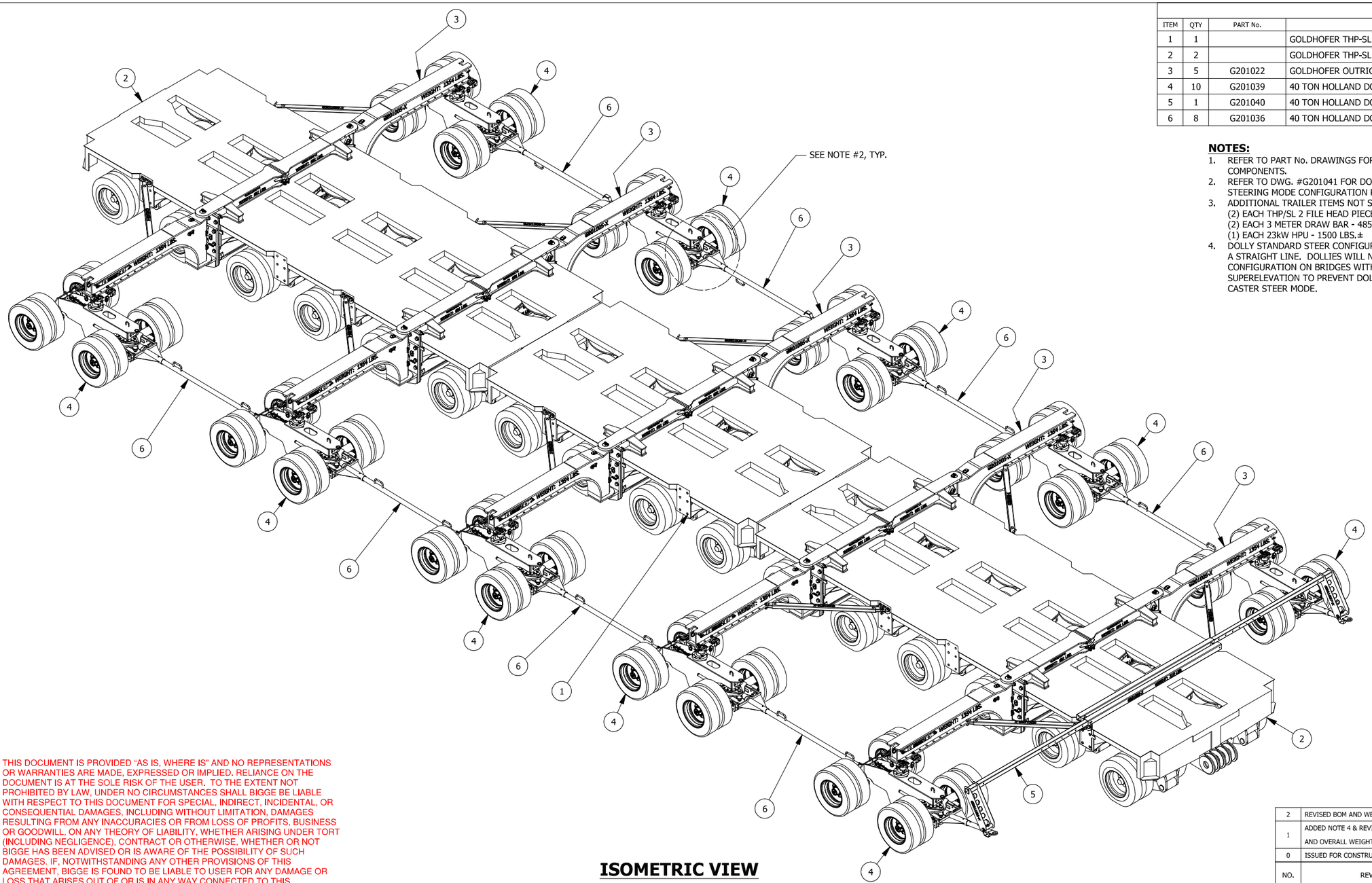

PARTS LIST				
ITEM	QTY	PART No.	DESCRIPTION	WEIGHT EA (LBS)
1	1		GOLDHOFER THP-SL 4 LINE BOGY SECTION - NORMAL CONFIGURATION	29983
2	2		GOLDHOFER THP-SL 6 LINE BOGY SECTION - NORMAL CONFIGURATION	44095
3	5	G201022	GOLDHOFER OUTRIGGER ASSEMBLY - SWING TYPE - 2 FILE	5053
4	10	G201039	40 TON HOLLAND DOLLY WITH CUSTOM ADAPTER PLATE ASSEMBLY	3050
5	1	G201040	40 TON HOLLAND DOLLY STEERING ASSEMBLY	409
6	8	G201036	40 TON HOLLAND DOLLY TOW BAR - TYPE 1	70

NOTES:

1. REFER TO PART No. DRAWINGS FOR INFORMATION ON MOUNTING HARDWARE AND COMPONENTS.
2. REFER TO DWG. #G201041 FOR DOLLY TOE BAR PIN HARDWARE AND DOLLY STEERING MODE CONFIGURATION REQUIREMENTS.
3. ADDITIONAL TRAILER ITEMS NOT SHOWN:
   (2) EACH THP/SL 2 FILE HEAD PIECE - 500 LBS.± EACH
   (2) EACH 3 METER DRAW BAR - 485 LBS.± EACH
   (1) EACH 23kW HPU - 1500 LBS.±
4. DOLLY STANDARD STEER CONFIGURATION WITH TOW BARS WILL ONLY TRACK IN A STRAIGHT LINE. DOLLIES WILL NOT TURN WITH TRAILER. USE THIS STEERING CONFIGURATION ON BRIDGES WITH LIMITED CURB CLEARANCE AND/OR SUPERELEVATION TO PREVENT DOLLY TRACKING DEVIATION ASSOCIATED WITH CASTER STEER MODE.

THIS DOCUMENT IS PROVIDED "AS IS, WHERE IS" AND NO REPRESENTATIONS OR WARRANTIES ARE MADE, EXPRESSED OR IMPLIED. RELIANCE ON THE DOCUMENT IS AT THE SOLE RISK OF THE USER. TO THE EXTENT NOT PROHIBITED BY LAW, UNDER NO CIRCUMSTANCES SHALL BIGGE BE LIABLE WITH RESPECT TO THIS DOCUMENT FOR SPECIAL, INDIRECT, INCIDENTAL, OR CONSEQUENTIAL DAMAGES, INCLUDING WITHOUT LIMITATION, DAMAGES RESULTING FROM ANY INACCURACIES OR FROM LOSS OF PROFITS, BUSINESS OR GOODWILL, ON ANY THEORY OF LIABILITY, WHETHER ARISING UNDER TORT (INCLUDING NEGLIGENCE), CONTRACT OR OTHERWISE, WHETHER OR NOT BIGGE HAS BEEN ADVISED OR IS AWARE OF THE POSSIBILITY OF SUCH DAMAGES. IF, NOTWITHSTANDING ANY OTHER PROVISIONS OF THIS AGREEMENT, BIGGE IS FOUND TO BE LIABLE TO USER FOR ANY DAMAGE OR LOSS THAT ARISES OUT OF OR IS IN ANY WAY CONNECTED TO THIS DOCUMENT, BIGGE'S ENTIRE LIABILITY FOR DIRECT DAMAGES UNDER THIS AGREEMENT SHALL BE LIMITED TO FIFTY DOLLARS ($50.00).

ISOMETRIC VIEW

16 LINE x 2 FILE THP/SL W/5 OUTRIGGERS

APPROX. WEIGHTAS SHOWN: 174,896 LBS.±
(DOES NOT INCLUDE GOLDHOFER DRAW BAR(S), HEAD PIECE(S), AND HPU)
APPROX. TOTAL WEIGHT: 178,366 LBS.±

THIS DRAWING REPLACES AND IS PRECEEDED BY DWG. #TC-THP-SL 6+4+6Lx2F - 5OR-1.

NO.	REVISIONS	DATE	BY	DATE	BY	DATE	BY
		DRAWN		CHECKED		APPROVED	
2	REVISED BOM AND WEIGHTS	4/26/2018	MWJ	5/22/2018	VLH	5/22/2018	VLH
1	ADDED NOTE 4 & REVISED WEIGHT OF ITEM 6 AND OVERALL WEIGHTS	12/16/2016	MWJ	12/16/2016	VLH	12/16/2016	VLH
0	ISSUED FOR CONSTRUCTION	11/16/2016	MWJ	11/16/2016	VLH	11/16/2016	VLH

This drawing contains information proprietary to Bigge Crane and Rigging Co. It is submitted in confidence and is to be used solely for the purpose for which it is furnished and returned upon request. This drawing and such information is not to be reproduced, transmitted, disclosed or used in whole or in part without the written authorization of Bigge Crane and Rigging Co.

BIGGE CRANE and RIGGING CO.
Established 1916
10700 Bigge Ave., San Leandro, CA 94577
www.BIGGE.com

16 LINE x 2 FILE THP/SL W/5 OUTRIGGERS
ISOMETRIC VIEW
TRAILER AND OUTRIGGER CONFIGURATION

SCALE: (U.N.O)	SIZE	PROJECT No.	DWG. No.	SHEET	REV.
NTS	B		G201045	1 of 2	3

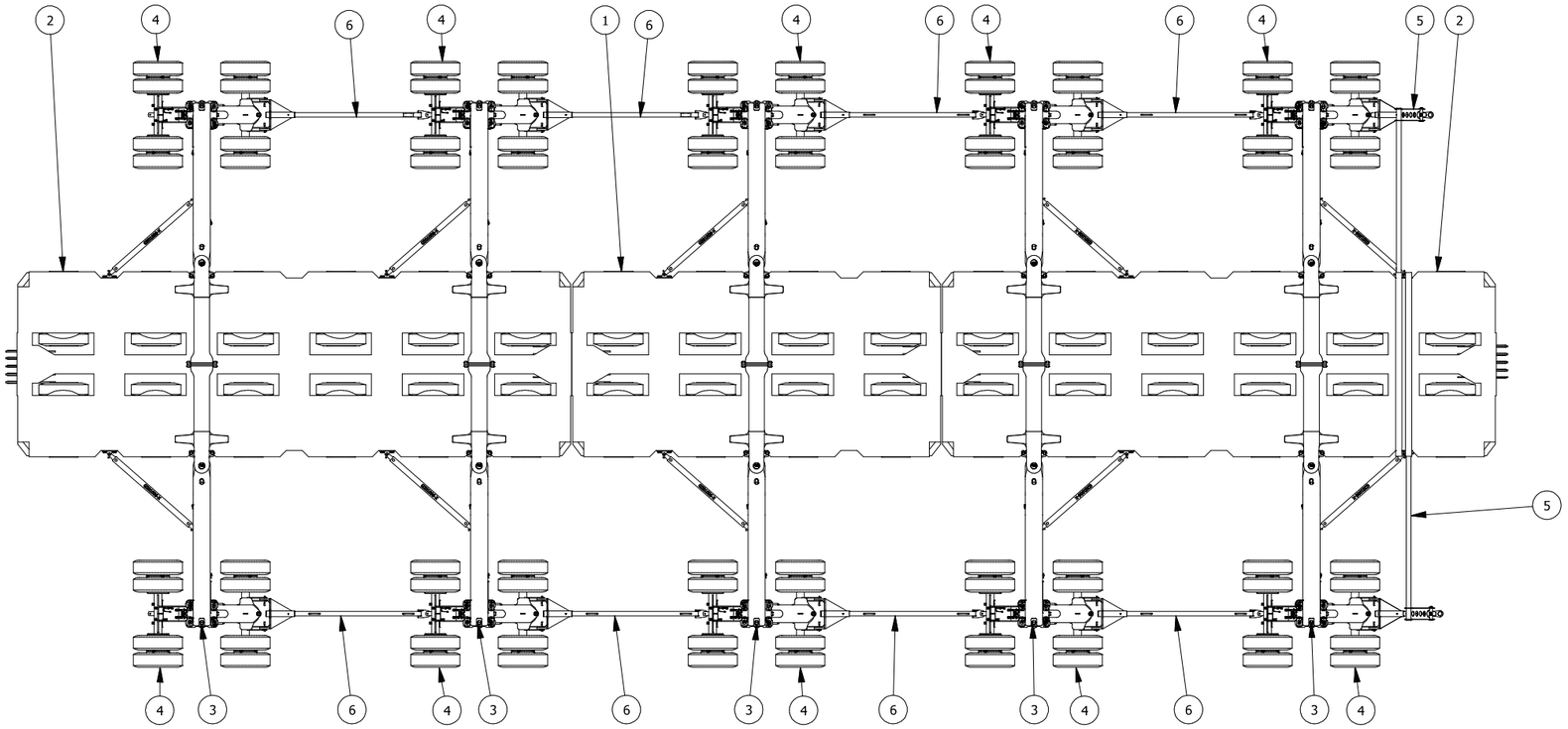

PLAN VIEW

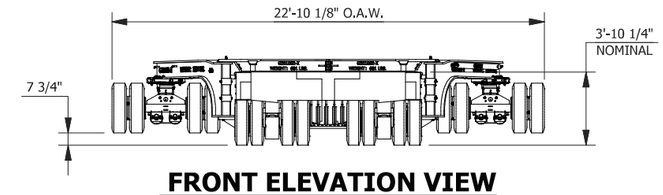

FRONT ELEVATION VIEW (PAVEMENT MODE, WITH DOLLIES)

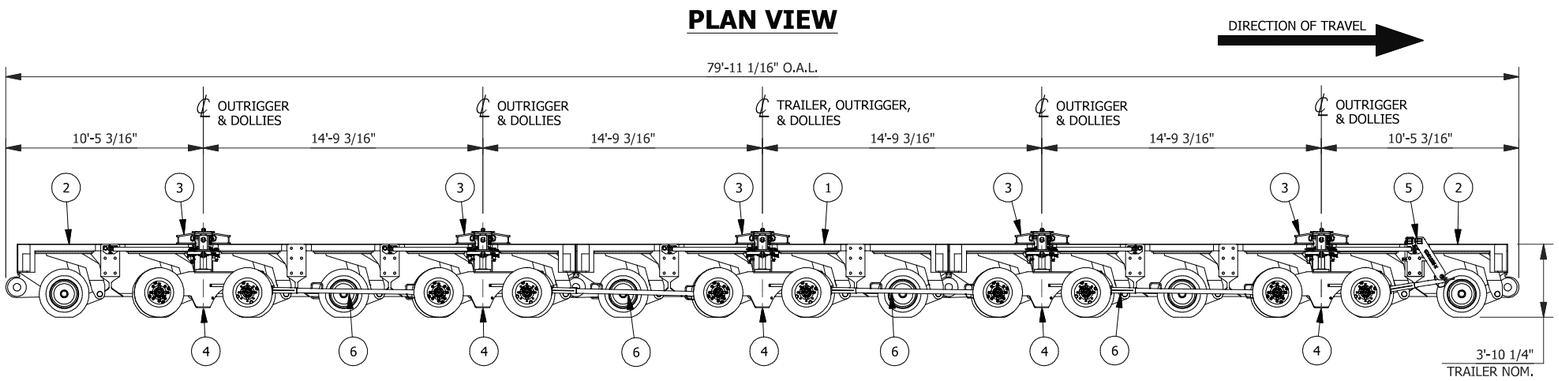

SIDE ELEVATION VIEW

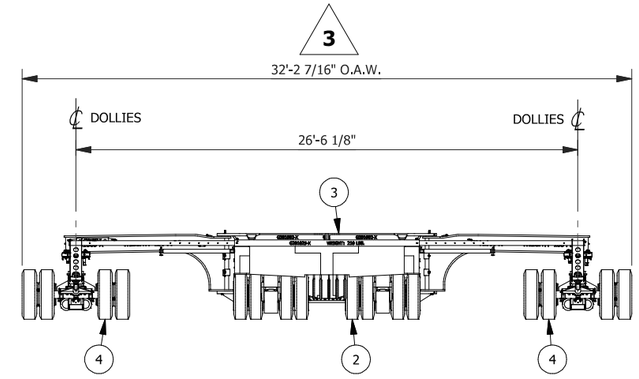

FRONT ELEVATION VIEW

NO.	REVISIONS	DATE	BY	DATE	BY	DATE	BY
		DRAWN		CHECKED		APPROVED	
3	REVISED DIMENSION	5/30/2018	MWJ	5/30/2018	VLH	5/30/2018	VLH
0	ISSUED FOR CONSTRUCTION	11/16/2016	MWJ	11/16/2016	VLH	11/16/2016	VLH

This drawing contains information proprietary to Bigge Crane and Rigging Co. It is submitted in confidence and is to be used solely for the purpose for which it is furnished and returned upon request. This drawing and such information is not to be reproduced, transmitted, disclosed or used in whole or in part without the written authorization of Bigge Crane and Rigging Co.

BIGGE CRANE and RIGGING CO.
Established 1916
10700 Bigge Ave., San Leandro, CA 94577
www.BIGGE.com

16 LINE x 2 FILE THP/SL W/5 OUTRIGGERS
ORTHO VIEWS
TRAILER AND OUTRIGGER CONFIGURATION

SCALE: (U.N.O)	SIZE	PROJECT No.	DWG. No.	SHEET	REV.
1/8"=1'-0"	B		G201045	2 of 2	3

THIS DOCUMENT IS PROVIDED "AS IS, WHERE IS" AND NO REPRESENTATIONS OR WARRANTIES ARE MADE, EXPRESSED OR IMPLIED. RELIANCE ON THE DOCUMENT IS AT THE SOLE RISK OF THE USER. TO THE EXTENT NOT PROHIBITED BY LAW, UNDER NO CIRCUMSTANCES SHALL BIGGE BE LIABLE WITH RESPECT TO THIS DOCUMENT FOR SPECIAL, INDIRECT, INCIDENTAL, OR CONSEQUENTIAL DAMAGES, INCLUDING WITHOUT LIMITATION, DAMAGES RESULTING FROM ANY INACCURACIES OR FROM LOSS OF PROFITS, BUSINESS OR GOODWILL, ON ANY THEORY OF LIABILITY, WHETHER ARISING UNDER TORT (INCLUDING NEGLIGENCE), CONTRACT OR OTHERWISE, WHETHER OR NOT BIGGE HAS BEEN ADVISED OR IS AWARE OF THE POSSIBILITY OF SUCH DAMAGES. IF, NOTWITHSTANDING ANY OTHER PROVISIONS OF THIS AGREEMENT, BIGGE IS FOUND TO BE LIABLE TO USER FOR ANY DAMAGE OR LOSS THAT ARISES OUT OF OR IS IN ANY WAY CONNECTED TO THIS DOCUMENT, BIGGE'S ENTIRE LIABILITY FOR DIRECT DAMAGES UNDER THIS AGREEMENT SHALL BE LIMITED TO FIFTY DOLLARS ($50.00).