BILL OF MATERIALS						
ITEM	QTY	MATERIAL DESCRIPTION	UNIT WEIGHT (LBS)	QTY WEIGHT (LBS)	MATERIAL	REMARKS
1	1	JB114 JACKING BEAM	3698.79	3699	W14x132x10'-6", A992	EXISTING

NOTES:

1. FOR GENERAL NOTES SEE DWG. GN1-1.
2. EACH PART SHALL BE LABELED WITH A UNIQUE PART ID NUMBER AS INDICATED ON THIS DRAWING. THE "X" REPRESENTS UNIQUE SEQUENCE NUMBERS, DESIGNATED IN THE EFR OR PURCHASE ORDER, THAT SHALL BE USED IN THAT LOCATION.
3. MODIFICATIONS IN THIS REVISION WERE MADE FOR JOB #10-04-039475 - GLOBAL DIVING & SALVAGE - SF DERRICK RECOVERY PROJECT.
4. STIFFENER PLATES UNDER THE STRAND JACK GUIDE MOUNTING PLATE SHALL NOT BE REMOVED.
5. REVISION 1A REFLECTS ONLY GRAPHICAL AND WEIGHT CHANGES BASED ON THE ACTUAL CONDITION OF THE EQUIPMENT, WITHOUT ADDITIONAL MODIFICATIONS. IT IS BEING ISSUED AFTER THE INDICATED MODIFICATION WORK HAS BEEN COMPLETED SO THE ACTUAL LABLED WEIGHT IS LIKELY INCORRECT AND SHOULD BE UPDATED WHEN POSSIBLE.

1A

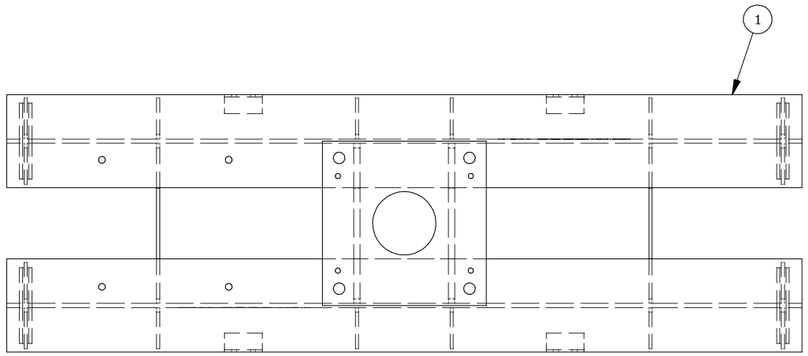

PLAN VIEW

SCALE: 1/2" = 1'-0"

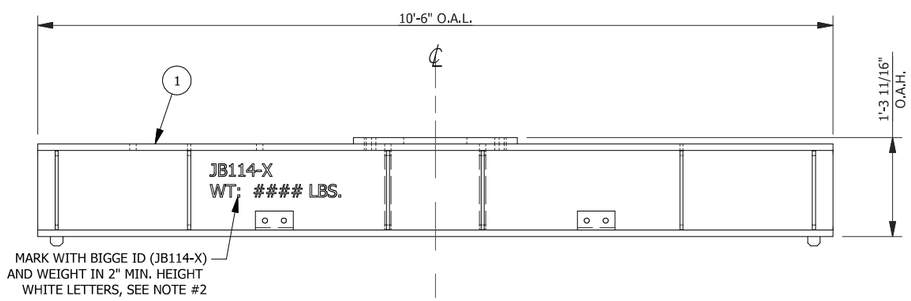

ELEVATION VIEW

SCALE: 1/2" = 1'-0"

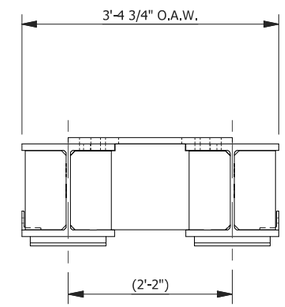

END VIEW

SCALE: 1/2" = 1'-0"

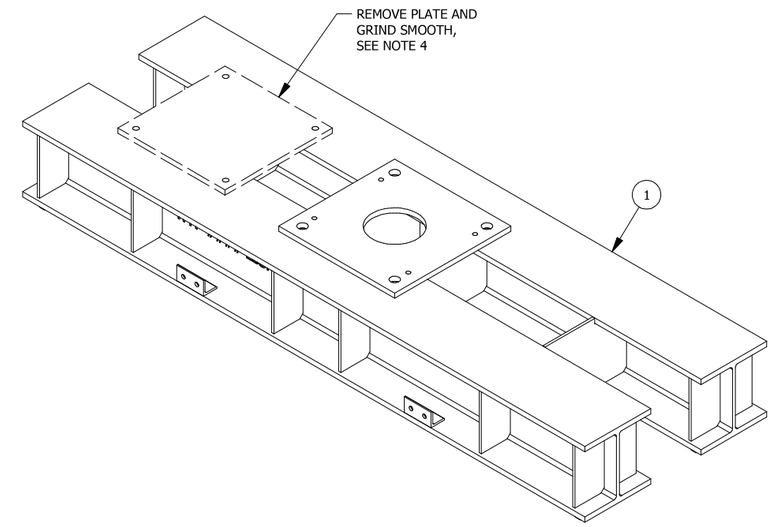

ISOMETRIC VIEW

JB114 JACKING BEAM

APPROX. WEIGHT: 3480 LBS.±

1A

THIS DOCUMENT IS PROVIDED "AS IS, WHERE IS" AND NO REPRESENTATIONS OR WARRANTIES ARE MADE, EXPRESSED OR IMPLIED. RELIANCE ON THE DOCUMENT IS AT THE SOLE RISK OF THE USER. TO THE EXTENT NOT PROHIBITED BY LAW, UNDER NO CIRCUMSTANCES SHALL BIGGE BE LIABLE WITH RESPECT TO THIS DOCUMENT FOR SPECIAL, INDIRECT, INCIDENTAL, OR CONSEQUENTIAL DAMAGES, INCLUDING WITHOUT LIMITATION, DAMAGES RESULTING FROM ANY INACCURACIES OR FROM LOSS OF PROFITS, BUSINESS OR GOODWILL, ON ANY THEORY OF LIABILITY, WHETHER ARISING UNDER TORT (INCLUDING NEGLIGENCE), CONTRACT OR OTHERWISE, WHETHER OR NOT BIGGE HAS BEEN ADVISED OR IS AWARE OF THE POSSIBILITY OF SUCH DAMAGES. IF, NOTWITHSTANDING ANY OTHER PROVISIONS OF THIS AGREEMENT, BIGGE IS FOUND TO BE LIABLE TO USER FOR ANY DAMAGE OR LOSS THAT ARISES OUT OF OR IS IN ANY WAY CONNECTED TO THIS DOCUMENT, BIGGE'S ENTIRE LIABILITY FOR DIRECT DAMAGES UNDER THIS AGREEMENT SHALL BE LIMITED TO FIFTY DOLLARS ($50.00).

TOLERANCES (U.N.O.)

METRIC
.X ±.5mm
.XX ±.10mm
.XXX ±.01mm
ENGLISH
.X ±.05"
.XX ±.015"
.XXX ±.005"
.XXXX ±.0005"
ANGULAR: ± 0.25°
LINEAR FRACTIONAL: ± 1/16"
HOLES FRACTIONAL: +1/32" - 0"

HEAT TREATMENT:
ROCKWELL C ±4
BRINELL ±15

THIRD ANGLE PROJECTION

DO NOT SCALE OFF OF DRAWING

NO.	REVISIONS	DATE	BY	DATE	BY	DATE	BY
		DRAWN		CHECKED		APPROVED	
1A	CORRECTED STIFF. PLATE THKNS. & WEIGHT	6/12/2017	DER	6/14/2017	OPH	10/15/2016	OPH
1	ISSUED FOR CONSTRUCTION	4/24/2017	DER	4/27/2017	TJS	4/27/2017	TJS

This drawing contains information proprietary to Bigge Crane and Rigging Co. It is submitted in confidence and is to be used solely for the purpose for which it is furnished and returned upon request. This drawing and such information is not to be reproduced, transmitted, disclosed or used in whole or in part without the written authorization of Bigge Crane and Rigging Co.

BIGGE CRANE and RIGGING CO.
Established 1916
10700 Bigge Ave., San Leandro, CA 94577
www.BIGGE.com

JB114 JACKING BEAM
ORTHOGRAPHIC AND ISOMETRIC VIEWS
BIGGE EQUIPMENT FABRICATION

SCALE: (U.N.O)	SIZE	PROJECT No.	DWG. No.	SHEET	REV.
NOTED	B		JB114	1 of 1	1A